HTPG

INSTALLATION & OPERATION MANUAL

# A1 & A2L EQUIPMENT

## INSTALLATION & OPERATION MANUAL

IOMA2LSYS2603
P/N: 08499178 REV 01

# TABLE OF CONTENTS


Safety and General Information ..... 3
A2L Equipment Specific Information ..... 4
$M_{rel}$ AND $A_{min}$ Requirements For A2L Refrigerants ..... 5
$A_{min}$ Calculations ..... 6-7
Maximum Releasable Charge Calculation ..... 8-9
Internal Volumes ..... 10-12
$M_{rel}$ AND $A_{min}$ Tables ..... 13
Low Profile Unit Coolers Tables. ..... 14-15
Center Mount Unit Coolers Tables ..... 16-17
Low Velocity Center Mount Unit Coolers Tables ..... 18-19
Medium Profile Unit Coolers Tables ..... 20-21
Heavy Duty Unit Coolers Tables ..... 22-23
Warehouse Unit Coolers Tables ..... 24-25
Locating and Mounting Condensing Units ..... 26
QV Series Condensing Units Rigging Data ..... 27-28
Locating Walk-In Evaporators ..... 29-30
General Installation Information ..... 31
Field Piping and Labeling Requirements ..... 31-33
Suction Line Design ..... 34
A2L Piping Schemes ..... 35
System, Leak Testing, and Leak Repairs ..... 36-37
Refrigerant Recovery ..... 38
Field Wiring ..... 38
Typical Field Wiring Diagrams ..... 39-42
QV Series Convenience Outlet & Height Wiring ..... 43
A2L Field Wiring ..... 44-55
Leak Detector Sequence of Operation ..... 56
Charging ..... 56-58
Refrigerant Charge Per 100 Ft. of Line ..... 59
Pounds of Additional Refrigerant Charge to Add ..... 60-62
QV Series Minimun Charge Monitor ..... 63
General Repairs ..... 64-67
Defrost Operation ..... 67-68
Low Ambient Head Pressure Control ..... 68-71
Product Loading and Air Circulation ..... 72-74
Scroll Compressor Operation ..... 74
Troubleshooting ..... 75-78
Water-Cooled Condenser Maintenance ..... 79
System Maintenance ..... 80
System Startup Checklist & System Service Record ..... 81-82
Decommissioning ..... 83

# SAFETY AND GENERAL INFORMATION

READ THESE INSTRUCTIONS ALL THE WAY THROUGH BEFORE STARTING WORK!

**⚠ SAFETY WARNING**

Make sure all power sources are disconnected before doing any service work. LOCK disconnects in the OFF position to prevent accidental turning on and injury. Commercial refrigeration equipment should be installed, started-up, maintained, and serviced by trained and certified personnel having experience with this type of equipment.

All field wiring must conform to the requirements of the equipment, applicable local codes and the National Electrical Code. Always use correct size copper conductors. Sheet metal and coil surface have sharp edges that are a potential injury hazard. Handle carefully, using gloves and other protective safety wear to prevent injury.

To reduce the risk of fire, electric shock, or equipment damage, **do not use mechanical tools, heating devices**, or any unapproved methods to accelerate defrosting. Only use defrosting procedures and equipment explicitly recommended by the manufacturer.

- **Do not** use unapproved tools or methods to accelerate defrosting or cleaning. Only follow procedures recommended by the manufacturer.
- Store the appliance in a well-ventilated area, away from continuously operating ignition sources such as open flames, gas appliances, or electric heaters.
- **Do not** pierce or incinerate refrigerant-containing components.
- Be aware that some refrigerants may be odorless, making leaks difficult to detect without proper sensors.

Factory-installed refrigerant sensors or detectors **must not be disconnected** under any circumstances. Only HTPG-approved replacement parts may be used when replacing a refrigerant sensor.

## Inspection

Check all items against the bill of lading to make sure all crates and cartons have been received. If there are any shortages or damage, report it immediately to the carrier and file a freight claim. Damaged equipment is the delivering carrier's responsibility. It is the customer's responsibility to file all claims with the freight company. Take care not to damage equipment when uncrating. Check for concealed damage. Do not return damaged equipment to the factory without prior approval. A Return Material Authorization (RMA) must be obtained in advance. Items returned without an RMA label will be refused.

Check the unit specplate. Verify that the specplate voltage agrees with the available power supply. Large condensing units, remote condensers, and evaporators should be left on their shipping skid until at their final location. Do not use the shipping skid as a permanent base.

## Rigging and Handling

Good rigging and handling practice must be used to protect units from damage. Having proper handling equipment at the jobsite is most important and should be planned in advance. Always use spreader bars when lifting with cable, chain, or slings. Do not hoist a crate from it's upper members. If rigging is required, support the crate from the skid. All crates are blocked up for forklift handling. Do not forklift against sheet metal panels or coils. Always lift against a structural part of the skid or unit at the center of gravity. Secure units to a forklift to prevent slipping off.

Large condensing units have compressors mounted near one end that offsets the center of gravity. Find the center of gravity near the compressor end to prevent tipping when lifting. Smaller, lighter units may be carefully manhandled for short distances. Observe the units for additional lifting and rigging decals.

# A2L EQUIPMENT SPECIFIC INFORMATION

## Refrigerant Detection System

HTPG indoor equipment—including unit coolers and Water-Cooled Condensing Units—is furnished with an integral refrigerant detection system. Outdoor units do not require this feature.

The detection circuit includes a dry contact that can be used to:

- Trigger alarms
- Signal a building management system
- Activate a ventilation circuit

*- These components must be furnished by the installer.*

## Leak Detector Locations

- Unit Coolers - Leak detectors located near drain pan on header end; longer units also on electrical end
- Water-Cooled Condensing Unit - Leak detectors located near the base of the unit

## Leak Detector Power & System Response

- Powered by onboard 24V transformer
- One or more sealed relays are controlled by the leak detector.
- Response varies by system type:
  - Non-EcoNet units: purely electromechanical
  - EcoNet units: isolation valve is electromechanical; other features are controller-driven

## Unique HTPG Features

- HTPG air and electric systems include several distinctive design elements:
- A single valve provides both liquid control and safety shutoff.
- The suction line uses a check valve instead of a solenoid.
- During a leak event, the compressor pumps down, reducing refrigerant release into the box.

## Leak Response: Single Unit System

When a leak is detected:

- The liquid line solenoid valve closes
- The compressor pumps down until the system shuts off on low pressure
- Fans activate immediately, running at high or low speed depending on thermostat status
- If in defrost or drip mode, the system exits that mode and begins pump down
- Once refrigerant concentration drops below the alarm threshold and at least one hour has passed, the system automatically restarts

## Leak Response: Multi-Unit System

When multiple unit coolers are connected to one condensing unit:

- Systems may be piped for individual isolation or group isolation
- Individual piping: each unit cooler has its own set of isolation valves
- Group piping: all unit coolers share one set of valves

# $M_{REL}$ AND $A_{MIN}$ REQUIRMENTS FOR A2L REFRIGERANTS

Installations for field erected systems consisting of various partial units such as condensing units and unit coolers must provide the following mitigation actions. During a leak event in a cooler/ freezer box, the unit cooler leak detector must close the safety shut off valve(s). Other actions are dependent on the refrigerant quantity that may be released.

The maximum releasable charge ($m_{rel}$) is the refrigerant mass which can be lost in a leak event. This quantity is used to determine if air circulation or ventilation is necessary and it also dictates the smallest room ($A_{min}$) in which the equipment may be installed. Unit cooler values for $m_{rel}$ and $A_{min}$ are listed in the Maximum Releasable Charge & Minimum Room Area tables. Alternatively, they may be calculated using the Maximum Releasable Charge Calculation section and $A_{min}$ calculations shown on the following pages or you can get assistance from an HTPG associate. Water-Cooled Condensing Units use the complete system charge ($m_c$) rather than $m_{rel}$. This is the system charge applied during installation.

The value $m_{rel}$ is compared to $m_1$, $m_2$, and $m_3$ (see table below) to determine the circulation and ventilation requirements.

Values for $m_1$, $m_2$, $m_3$

| MASS | R454A | | R454C | | R455A | |
|---|---|---|---|---|---|---|
| | KG | LB | KG | LB | KG | LB |
| *m1* | 3.614 | 7.97 | 3.783 | 8.34 | 4.121 | 9.09 |
| *m2* | 14.456 | 31.87 | 15.132 | 33.36 | 16.484 | 36.34 |
| *m3* | 72.280 | 159.35 | 75.660 | 166.80 | 82.420 | 181.70 |

If $m_{rel} < m_1$ there is no need to circulate air or ventilate the cooler/freezer box.

If $m_1 \leq m_{rel} \leq m_2$ the fans must be activated to provide constant air circulation within the cooler/ freezer box. Also, there is no need for box ventilation.

If $m_2 \leq m_{rel} \leq m_3$ the fans must be activated to provide constant air circulation within the cooler/ freezer box and box ventilation must be activated.

Unit cooler installations having $m_{rel} > m_3$ are not allowed. Condensing unit Installations that have $m_{rel} > m_3$ which are intended to be installed in a mechanical room or oudoors shall comply with the requirements of ASHRAE 15.

HTPG A2L unit coolers are equipped with a refrigerant detection system which will cause the fans to run immediately (continuous circulation) and to immediately close any isolation valves. They are also provided with a dry alarm contact which may be used to trigger an alarm, signal a building control system, or trigger a ventilation system. Any necessary ventilation equipment and ventilation controls are not furnished by HTPG.

# $A_{min}$ CALCULATIONS

The calculations for $A_{min}$ and $m_{max}$ are shown below. The $A_{min}$ value is always used to ensure the room size is appropriate for the equipment. However, $m_{max}$ is only used to determine the ventilation CFM requirement for installations requiring ventilation.

For installations **without** circulation or ventilation *(This calculatation also applies to Water-Cooled Condensing Units when $m_{rel}$ is substituted by $m_c$):*

$$A_{min} = \frac{m_{rel}}{(0.25 \times LFL \times H)}$$

For installations **with** circulation or ventilation *(All HTPG unit coolers provide circulation):*

$$m_{max} = 0.5 \times LFL \times H \times A$$

$$A_{min} = \frac{m_{rel}}{(0.5 \times LFL \times H)}$$

Where:

*LFL, kg/m³ or lb/ft³* (Lower flammability limit. See table.)
*H*, m or ft (Height inside cooled space. For rooms taller than 2.2 m (7.22 ft) use 2.2m (7.22 ft).)
*A*, m² or ft² (Floor area of cooled space. For rooms greater than 250 m² (2691 ft²) use 250 m² (2691 ft²).)

$m_{rel}$ , kg or lb
$A_{min}$ , m² or ft²

If ventilation is required, it must be furnished by the installer and must comply with the following guidelines or those published in ASHRAE 15, the safety standard for refrigeration systems.

The required mechanical ventilation airflow is calculated as follows:

$$Q_{vent\ min} = \frac{30\ (m_{rel} - m_{max})}{LFL}$$ ; not to exceed -486 / LFL (SI Units) or -1071 / LFL (IP Units)

Where:

$Q_{vent\ min}$, m³/hr or lb/ft³
$m_{rel}$ & $m_{max}$, kg or lb
*LFL*, kg/m³ or lb (see table)

**Lower Flammability Limits**

| Refrigerant | LFL | |
|---|---|---|
| | kg/m³ | lb/ft³ |
| R455A | 0.278 | 0.01735 |
| R454C | 0.291 | 0.01817 |
| R454A | 0.317 | 0.01979 |

The room's ventilation exhaust opening shall be situated near the floor with bottom of the opening no higher than 100 mm (3.94 in) above the floor.

The ventilation exhaust shall be directed either outdoors or into a space of sufficient volume to ensure safe concentrations of the diluted refrigerant.

Installations requiring mechanical ventilation must provide circulation airflow to mix air in the room.

SI units

$Q_{circ\ min} = 135 \times CAP$
$V_{circ\ min} = 2$

Where:

$Q_{circ\ min}$, $m^3/hr$
$V_{circ\ min}$, $m/s$
*CAP, kw* (unit cooler cooling capacity)

LP units

$Q_{circ\ min} = 1.397 \times CAP$
$V_{circ\ min} = 6.56$

Where:

$Q_{circ\ min}$, $ft^3/hr$
$V_{circ\ min}$, $ft/s$
*CAP, btu/h* (unit cooler cooling capacity)

For determination of the air velocity ($v_{circ\ min}$) divide the airflow ($Q_{circ\ min}$) by the area of the outlet opening. The area of the grill shall not be deducted for this calculation.

$V_{circ} = Q_{circ} / A_{vent}$

Ventilation must be controlled so that it will continue at least 5 minutes after the refrigerant leak detection system resets. HTPG does not include a timer relay in our equipment to support this function.

# MAXIMUM RELEASABLE CHARGE CALCULATION

$m_{rel}$ is the maximum refrigerant mass which may be released into an enclosed space during a leak event. It is based on standard cooling mode conditions. It is calculated as the sum of the refrigerant mass in the suction line (*vap*), liquid line (*liq*), unit cooler (*mix*), and the mass which may enter the isolated section during the time it takes for the system to respond to a leak (*resp*). System designers should attempt to limit refrigerant line dimensions downstream of the isolation valves to minimize $m_{rel}$ as this affects the mitigation requirements. Matched systems which involve multiple unit coolers may use separate isolation valves for individual unit coolers to reduce $m_{rel}$.

$m_{rel}$ is calculated as follows:

$$m_{rel} = m_{suct\ line} + m_{liq\ line} + m_{unit} + m_{resp}$$

SI units

$$m_{rel} = (L_{vap} \times TD_{vap} \times \rho_{vap}) + (L_{liq} \times TD_{liq} \times \rho_{liq}) + (IV_{unit} \times \rho_{mix}) + (0.0068, kg/s \times T_{resp})$$

Where:

*L,m*
*TD, $m^3/m$*
*ρ, $kg/m^3$*
*$IV/m^3$*
*T, s*

IP units

$$m_{rel} = (L_{vap} \times TD_{vap} \times \rho_{vap}) + (L_{liq} \times TD_{liq} \times \rho_{liq}) + (IV_{unit} \times \rho_{mix}) + (0.015, kg/s \times T_{resp})$$

Where:

*L,ft*
*TD, $ft^3/ft$*
*ρ, $lb/ft^3$*
*$IV/ft^3$*
*T, s*

$L_{vap}$ is the total length of the suction tubing from the suction check valve to the unit cooler.
$L_{liq}$ is the total length of the liquid tubing from the liquid isolation solenoid valve to unit cooler. Values for *TD*, *ρ,* and *IV* are given in the following tables.

# MAXIMUM RELEASABLE CHARGE CALCULATION - TABLES

## TUBE VOLUME PER LENGTH, TD

| Tube OD | | TD, Tube Internal Volume Per Unit Length | |
|---|---|---|---|
| mm | in | $m^3$ / m | $ft^3$ / ft |
| 6.35 | 0.25 | 1.77E-05 | 2.05E-04 |
| 7.94 | 0.313 | 3.10E-05 | 3.59E-04 |
| 9.53 | 0.375 | 4.80E-05 | 5.55E-04 |
| 12.7 | 0.5 | 9.29E-05 | 1.08E-03 |
| 15.9 | 0.625 | 1.49E-04 | 1.73E-03 |
| 19.1 | 0.75 | 2.14E-04 | 2.48E-03 |
| 22.2 | 0.875 | 2.96E-04 | 3.43E-03 |
| 25.4 | 1 | 3.89E-04 | 4.50E-03 |
| 28.6 | 1.125 | 5.03E-04 | 5.82E-03 |
| 31.8 | 1.25 | 6.23E-04 | 7.21E-03 |
| 38.1 | 1.5 | 9.10E-04 | 1.05E-02 |
| 41.3 | 1.625 | 1.08E-03 | 1.25E-02 |
| 54 | 2.125 | 1.88E-03 | 2.18E-02 |
| 66.7 | 2.625 | 2.89E-03 | 3.35E-02 |

## DENSITY TABLE, $\rho$

| | | Medium Temperature | | | Low Temperature | | |
|---|---|---|---|---|---|---|---|
| | | $\rho_{vap}$ | $\rho_{liq}$ | $\rho_{mix}$ | $\rho_{vap}$ | $\rho_{liq}$ | $\rho_{mix}$ |
| R454A | $kg/m^3$ | 18.42 | 970.72 | 161.31 | 7.05 | 970.72 | 151.69 |
| | $lb/ft^3$ | 1.15 | 60.60 | 10.07 | 0.44 | 60.60 | 9.47 |
| R454C | $kg/m^3$ | 16.98 | 994.75 | 163.71 | 6.41 | 994.75 | 154.74 |
| | $lb/ft^3$ | 1.06 | 62.10 | 10.22 | 0.40 | 62.10 | 9.66 |
| R455A | $kg/m^3$ | 17.46 | 984.17 | 162.59 | 6.57 | 984.17 | 153.30 |
| | $lb/ft^3$ | 1.09 | 61.44 | 10.15 | 0.41 | 61.44 | 9.57 |

# INTERNAL VOLUMES

## LOW PROFILE UNIT COOLERS

| Generic Model | | Vol, $m^3$ | Vol, $ft^3$ |
|---|---|---|---|
| **AIR DEFROST** | | | |
| 6 FPI | *AL6A050 | 0.00074 | 0.0262 |
| | *AL6A062 | 0.00110 | 0.0388 |
| | *AL6A081 | 0.00149 | 0.0527 |
| | *AL6A088 | 0.00142 | 0.0500 |
| | *AL6A113 | 0.00208 | 0.0735 |
| | *AL6A141 | 0.00245 | 0.0864 |
| | *AL6A159 | 0.00279 | 0.0984 |
| | *AL6A170 | 0.00275 | 0.0970 |
| | *AL6A196 | 0.00307 | 0.1084 |
| | *AL6A220 | 0.00414 | 0.1461 |
| | *AL6A234 | 0.00368 | 0.1301 |
| | *AL6A289 | 0.00412 | 0.1455 |
| | *AL6A316 | 0.00544 | 0.1921 |
| | *AL6A375 | 0.00681 | 0.2406 |
| | *AL6A404 | 0.00711 | 0.2511 |
| | *AL6A477 | 0.00809 | 0.2858 |
| **ELECTRIC DEFROST** | | | |
| 6 FPI | *AL6E042 | 0.00074 | 0.0262 |
| | *AL6E051 | 0.00113 | 0.0400 |
| | *AL6E058 | 0.00149 | 0.0527 |
| | *AL6E079 | 0.00146 | 0.0516 |
| | *AL6E092 | 0.00217 | 0.0765 |
| | *AL6E110 | 0.00241 | 0.0851 |
| | *AL6E129 | 0.00288 | 0.1017 |
| | *AL6E148 | 0.00325 | 0.1147 |
| | *AL6E173 | 0.00424 | 0.1499 |
| | *AL6E194 | 0.00421 | 0.1485 |
| | *AL6E218 | 0.00552 | 0.1951 |
| | *AL6E237 | 0.00516 | 0.1824 |
| | *AL6E290 | 0.00614 | 0.2169 |
| | *AL6E343 | 0.00813 | 0.2872 |
| 4 FPI | *AL4E032 | 0.00074 | 0.0262 |
| | *AL4E040 | 0.00110 | 0.0389 |
| | *AL4E046 | 0.00149 | 0.0527 |
| | *AL4E061 | 0.00146 | 0.0516 |
| | *AL4E076 | 0.00217 | 0.0765 |
| | *AL4E099 | 0.00288 | 0.1017 |
| | *AL4E114 | 0.00325 | 0.1147 |
| | *AL4E133 | 0.00424 | 0.1499 |
| | *AL4E150 | 0.00421 | 0.1485 |
| | *AL4E170 | 0.00552 | 0.1951 |
| | *AL4E184 | 0.00516 | 0.1824 |
| | *AL4E232 | 0.00614 | 0.2169 |
| | *AL4E281 | 0.00813 | 0.2872 |

## CENTER MOUNT UNIT COOLERS

| Generic Model | | Vol, $m^3$ | Vol, $ft^3$ |
|---|---|---|---|
| **AIR DEFROST** | | | |
| 6 FPI | *AE6A051 | 0.00125 | 0.0441 |
| | *AE6A085 | 0.00175 | 0.0617 |
| | *AE6A103 | 0.00229 | 0.0807 |
| | *AE6A128 | 0.00256 | 0.0904 |
| | *AE6A157 | 0.00349 | 0.1231 |
| | *AE6A173 | 0.00347 | 0.1224 |
| | *AE6A207 | 0.00452 | 0.1596 |
| | *AE6A249 | 0.00573 | 0.2022 |
| | *AE6A316 | 0.00844 | 0.2981 |
| **ELECTRIC DEFROST** | | | |
| 6 FPI | *AE6E045 | 0.00097 | 0.0343 |
| | *AE6E054 | 0.00125 | 0.0441 |
| | *AE6E090 | 0.00191 | 0.0676 |
| | *AE6E107 | 0.00245 | 0.0864 |
| | *AE6E129 | 0.00269 | 0.0950 |
| | *AE6E149 | 0.00348 | 0.1230 |
| | *AE6E160 | 0.00347 | 0.1224 |
| | *AE6E217 | 0.00456 | 0.1609 |
| | *AE6E265 | 0.00578 | 0.2040 |
| | *AE6E337 | 0.00851 | 0.3005 |
| 4 FPI | *AE4E043 | 0.00125 | 0.0441 |
| | *AE4E087 | 0.00233 | 0.0823 |
| | *AE4E127 | 0.00348 | 0.1230 |
| | *AE4E183 | 0.00456 | 0.1609 |
| | *AE4E222 | 0.00578 | 0.2040 |
| | *AE4E283 | 0.00851 | 0.3005 |

# INTERNAL VOLUMES

## LOW VELOCITY CENTER MOUNT UNIT COOLERS

| Generic Model | | Vol, $m^3$ | Vol, $ft^3$ |
|---|---|---|---|
| **AIR DEFROST** | | | |
| 6 FPI | *AV6A053 | 0.00140 | 0.0493 |
| | *AV6A066 | 0.00097 | 0.0343 |
| | *AV6A105 | 0.00256 | 0.0904 |
| | *AV6A 13 | 0.00342 | 0.1207 |
| | *AV6A159 | 0.00394 | 0.1393 |
| | *AV6A196 | 0.00514 | 0.1814 |
| | *AV6A216 | 0.00511 | 0.1804 |
| | *AV6A270 | 0.00670 | 0.2367 |
| | *AV6A338 | 0.00851 | 0.3005 |
| **ELECTRIC DEFROST** | | | |
| 6 FPI | *AV6E053 | 0.00140 | 0.0493 |
| | *AV6E066 | 0.00182 | 0.0642 |
| | *AV6E105 | 0.00256 | 0.0904 |
| | *AV6E131 | 0.00342 | 0.1207 |
| | *AV6E159 | 0.00394 | 0.1393 |
| | *AV6E196 | 0.00514 | 0.1814 |
| | *AV6E216 | 0.00511 | 0.1804 |
| | *AV6E270 | 0.00670 | 0.2367 |
| | *AV6E338 | 0.00851 | 0.3005 |

## MEDIUM PROFILE UNIT COOLERS

| Generic Model | | Vol, $m^3$ | Vol, $ft^3$ |
|---|---|---|---|
| **AIR DEFROST** | | | |
| 6 FPI | *AM6A219 | 0.0044 | 0.1558 |
| | *AM6A268 | 0.0058 | 0.2041 |
| | *AM6A336 | 0.0058 | 0.2062 |
| | *AM6A448 | 0.0085 | 0.2997 |
| | *AM6A540 | 0.0111 | 0.3927 |
| | *AM6A668 | 0.0126 | 0.4439 |
| | *AM6A800 | 0.0165 | 0.5829 |
| | *AM6A888 | 0.0167 | 0.5896 |
| | *AM6A990 | 0.0219 | 0.7731 |
| **MT ELECTRIC DEFROST** | | | |
| 6 FPI | *AM6D218 | 0.0044 | 0.1558 |
| | *AM6D267 | 0.0058 | 0.2041 |
| | *AM6D335 | 0.0058 | 0.2062 |
| | *AM6D447 | 0.0085 | 0.2997 |
| | *AM6D539 | 0.0111 | 0.3927 |
| | *AM6D667 | 0.0126 | 0.4439 |
| | *AM6D799 | 0.0165 | 0.5829 |
| | *AM6D887 | 0.0167 | 0.5896 |
| | *AM6D989 | 0.0219 | 0.7731 |
| **LT ELECTRIC DEFROST** | | | |
| 6 FPI | *AM6E181 | 0.0046 | 0.1620 |
| | *AM6E217 | 0.0060 | 0.2107 |
| | *AM6E371 | 0.0090 | 0.3177 |
| | *AM6E446 | 0.0117 | 0.4120 |
| | *AM6E557 | 0.0136 | 0.4819 |
| | *AM6E669 | 0.0176 | 0.6215 |
| | *AM6E741 | 0.0175 | 0.6181 |
| | *AM6E890 | 0.0236 | 0.8322 |
| 4 FPI | *AM4E129 | 0.0046 | 0.1613 |
| | *AM4E168 | 0.0059 | 0.2099 |
| | *AM4E271 | 0.0087 | 0.3070 |
| | *AM4E340 | 0.01134 | 0.40048 |
| | *AM4E398 | 0.01285 | 0.45368 |
| | *AM4E495 | 0.01680 | 0.59328 |
| | *AM4E529 | 0.01750 | 0.61812 |
| | *AM4E658 | 0.02261 | 0.79842 |

# INTERNAL VOLUMES

## HEAVY DUTY UNIT COOLERS

| Generic Model | | Vol, $m^3$ | Vol, $ft^3$ |
|---|---|---|---|
| **AIR DEFROST** | | | |
| 6 FPI | *AH6A038 | 0.01031 | 0.3641 |
| | *AH6A053 | 0.01540 | 0.5438 |
| | *AH6A064 | 0.02031 | 0.7173 |
| | *AH6A076 | 0.02018 | 0.7127 |
| | *AH6A108 | 0.03069 | 1.0837 |
| | *AH6A130 | 0.04000 | 1.4125 |
| | *AH6A162 | 0.04426 | 1.5631 |
| | *AH6A193 | 0.05817 | 2.0541 |
| | *AH6A215 | 0.05799 | 2.0478 |
| | *AH6A263 | 0.07653 | 2.7027 |
| **MT ELECTRIC DEFROST** | | | |
| 6 FPI | *AH6D037 | 0.01031 | 0.3641 |
| | *AH6D052 | 0.01540 | 0.5438 |
| | *AH6D063 | 0.02031 | 0.7173 |
| | *AH6D077 | 0.02018 | 0.7127 |
| | *AH6D107 | 0.03069 | 1.0837 |
| | *AH6D129 | 0.04000 | 1.4125 |
| | *AH6D161 | 0.04426 | 1.5631 |
| | *AH6D192 | 0.05817 | 2.0541 |
| | *AH6D214 | 0.05799 | 2.0478 |
| | *AH6D262 | 0.07653 | 2.7027 |
| **LT ELECTRIC DEFROST** | | | |
| 6 FPI | *AH6E040 | 0.01220 | 0.4307 |
| | *AH6E053 | 0.01697 | 0.5993 |
| | *AH6E065 | 0.02175 | 0.7681 |
| | *AH6E080 | 0.02144 | 0.757 |
| | *AH6E106 | 0.03360 | 1.1867 |
| | *AH6E131 | 0.04287 | 1.5138 |
| | *AH6E160 | 0.04744 | 1.6754 |
| | *AH6E188 | 0.06139 | 2.1681 |
| | *AH6E237 | 0.07949 | 2.8073 |
| 4 FPI | *AH4E043 | 0.01697 | 0.5993 |
| | *AH4E053 | 0.02175 | 0.7681 |
| | *AH4E086 | 0.03069 | 1.0837 |
| | *AH4E105 | 0.04287 | 1.5138 |
| | *AH4E128 | 0.04744 | 1.6754 |
| | *AH4E158 | 0.06139 | 2.1681 |
| | *AH4E198 | 0.07949 | 2.8073 |

## WAREHOUSE UNIT COOLERS

| Generic Model | | Vol, $m^3$ | Vol, $ft^3$ |
|---|---|---|---|
| **AIR DEFROST** | | | |
| 6 FPI | *AW6A042 | 0.01031 | 0.3641 |
| | *AW6A057 | 0.01540 | 0.5438 |
| | *AW6A072 | 0.02031 | 0.7173 |
| | *AW6A084 | 0.02018 | 0.7127 |
| | *AW6A116 | 0.03069 | 1.0837 |
| | *AW6A143 | 0.04000 | 1.4125 |
| | *AW6A173 | 0.04426 | 1.5631 |
| | *AW6A216 | 0.05817 | 2.0541 |
| | *AW6A235 | 0.05799 | 2.0478 |
| | *AW6A291 | 0.07653 | 2.7027 |
| **MT ELECTRIC DEFROST** | | | |
| 6 FPI | *AW6D042 | 0.01031 | 0.3641 |
| | *AW6D057 | 0.01540 | 0.5438 |
| | *AW6D072 | 0.02031 | 0.7173 |
| | *AW6D084 | 0.02018 | 0.7127 |
| | *AW6D116 | 0.03069 | 1.0837 |
| | *AW6D144 | 0.04000 | 1.4125 |
| | *AW6D174 | 0.04426 | 1.5631 |
| | *AW6D216 | 0.05817 | 2.0541 |
| | *AW6D235 | 0.05799 | 2.0478 |
| | *AW6D292 | 0.07653 | 2.7027 |
| **LT ELECTRIC DEFROST** | | | |
| 6 FPI | *AW6E044 | 0.01220 | 0.4307 |
| | *AW6E057 | 0.01697 | 0.5993 |
| | *AW6E071 | 0.02175 | 0.7681 |
| | *AW6E087 | 0.02144 | 0.757 |
| | *AW6E114 | 0.03360 | 1.1867 |
| | *AW6E142 | 0.04287 | 1.5138 |
| | *AW6E170 | 0.04744 | 1.6754 |
| | *AW6E215 | 0.06139 | 2.1681 |
| | *AW6E256 | 0.07949 | 2.8073 |
| 4 FPI | *AW4E045 | 0.01697 | 0.5993 |
| | *AW4E058 | 0.02175 | 0.7681 |
| | *AW4E092 | 0.03069 | 1.0837 |
| | *AW4E116 | 0.04287 | 1.5138 |
| | *AW4E136 | 0.04744 | 1.6754 |
| | *AW4E173 | 0.06139 | 2.1681 |
| | *AW4E214 | 0.07949 | 2.8073 |

# $M_{rel}$ AND $A_{min}$ TABLES

The unit cooler values for $m_{rel}$ and $A_{min}$ are shared in the following tables. These values are for cooled spaces having a height of 7.2 ft or taller. The values given are for unit coolers using isolated line lengths shown in the column headers. These line lengths represent the distance between the unit cooler inlet and the liquid solenoid valve. The suction line between the unit cooler outlet and check valve is assumed to be of the same length. Line sizes matched the unit cooler connections.

If your room height is less than 7.2 ft or if connection sizes don't match the unit cooler connections contact an HTPG representative for assistance determining $m_{rel}$ and *A*min or use the formulas provided in the above sections.

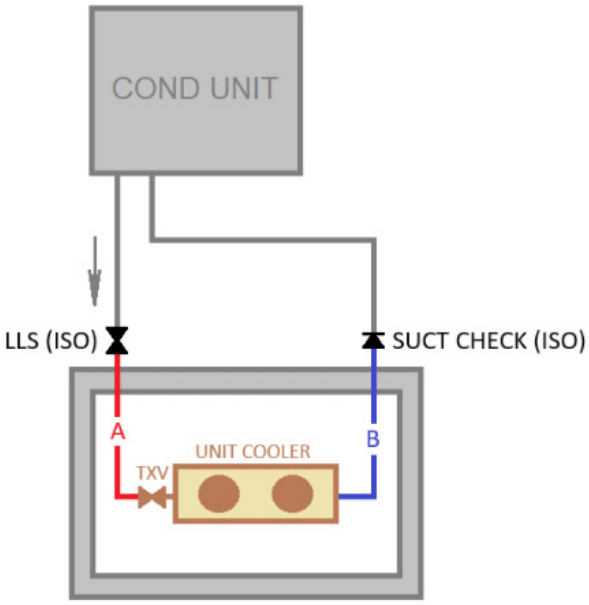

**LOW PROFILE UNIT COOLERS:** Maximum Releasable Charge ($m_{rel}$) - lb

| | Generic Model | R454A | | | | R454C | | | | R455A | | | |
|---|---|---|---|---|---|---|---|---|---|---|---|---|---|
| | | 10' | 20' | 30' | 40' | 10' | 20' | 30' | 40' | 10' | 20' | 30' | 40' |
| **AIR DEFROST** | | | | | | | | | | | | | |
| 6 FPI | *AL6A050 | 1.1 | 1.4 | 1.8 | 2.1 | 1.1 | 1.4 | 1.8 | 2.2 | 1.1 | 1.4 | 1.8 | 2.2 |
| | *AL6A062 | 1.2 | 1.6 | 1.9 | 2.3 | 1.2 | 1.6 | 1.9 | 2.3 | 1.2 | 1.6 | 1.9 | 2.3 |
| | *AL6A081 | 1.3 | 1.7 | 2.1 | 2.4 | 1.4 | 1.7 | 2.1 | 2.4 | 1.3 | 1.7 | 2.1 | 2.4 |
| | *AL6A088 | 1.3 | 1.7 | 2.0 | 2.4 | 1.3 | 1.7 | 2.1 | 2.4 | 1.3 | 1.7 | 2.0 | 2.4 |
| | *AL6A113 | 1.6 | 1.9 | 2.3 | 2.7 | 1.6 | 2.0 | 2.3 | 2.7 | 1.6 | 2.0 | 2.3 | 2.7 |
| | *AL6A141 | 1.7 | 2.1 | 2.4 | 2.8 | 1.7 | 2.1 | 2.5 | 2.9 | 1.7 | 2.1 | 2.5 | 2.8 |
| | *AL6A159 | 1.8 | 2.2 | 2.6 | 2.9 | 1.8 | 2.2 | 2.6 | 3.0 | 1.8 | 2.2 | 2.6 | 3.0 |
| | *AL6A170 | 1.8 | 2.2 | 2.6 | 2.9 | 1.8 | 2.2 | 2.6 | 3.0 | 1.8 | 2.2 | 2.6 | 2.9 |
| | *AL6A196 | 2.2 | 2.9 | 3.6 | 4.3 | 2.3 | 3.0 | 3.7 | 4.4 | 2.3 | 3.0 | 3.7 | 4.4 |
| | *AL6A220 | 2.6 | 3.3 | 4.0 | 4.7 | 2.7 | 3.4 | 4.1 | 4.8 | 2.6 | 3.3 | 4.0 | 4.7 |
| | *AL6A234 | 2.5 | 3.2 | 3.8 | 4.5 | 2.5 | 3.2 | 3.9 | 4.6 | 2.5 | 3.2 | 3.9 | 4.6 |
| | *AL6A289 | 2.6 | 3.4 | 4.1 | 4.8 | 2.7 | 3.4 | 4.1 | 4.9 | 2.7 | 3.4 | 4.1 | 4.8 |
| | *AL6A316 | 3.1 | 3.8 | 4.6 | 5.3 | 3.1 | 3.9 | 4.6 | 5.3 | 3.1 | 3.9 | 4.6 | 5.3 |
| | *AL6A375 | 3.6 | 4.3 | 5.0 | 5.8 | 3.6 | 4.4 | 5.1 | 5.8 | 3.6 | 4.3 | 5.1 | 5.8 |
| | *AL6A404 | 3.7 | 4.4 | 5.1 | 5.9 | 3.7 | 4.5 | 5.2 | 5.9 | 3.7 | 4.5 | 5.2 | 5.9 |
| | *AL6A477 | 4.1 | 4.8 | 5.5 | 6.2 | 4.1 | 4.8 | 5.6 | 6.3 | 4.1 | 4.8 | 5.5 | 6.3 |
| **ELECTRIC DEFROST** | | | | | | | | | | | | | |
| 6 FPI | *AL6E042 | 1.0 | 1.4 | 1.7 | 2.1 | 1.1 | 1.4 | 1.8 | 2.1 | 1.1 | 1.4 | 1.8 | 2.1 |
| | *AL6E051 | 1.2 | 1.5 | 1.9 | 2.3 | 1.2 | 1.6 | 1.9 | 2.3 | 1.2 | 1.6 | 1.9 | 2.3 |
| | *AL6E058 | 1.3 | 1.7 | 2.0 | 2.4 | 1.3 | 1.7 | 2.1 | 2.4 | 1.3 | 1.7 | 2.0 | 2.4 |
| | *AL6E079 | 1.3 | 1.7 | 2.0 | 2.4 | 1.3 | 1.7 | 2.0 | 2.4 | 1.3 | 1.7 | 2.0 | 2.4 |
| | *AL6E092 | 1.5 | 1.9 | 2.2 | 2.6 | 1.6 | 1.9 | 2.3 | 2.6 | 1.5 | 1.9 | 2.3 | 2.6 |
| | *AL6E110 | 1.6 | 2.0 | 2.4 | 2.7 | 1.7 | 2.0 | 2.4 | 2.8 | 1.6 | 2.0 | 2.4 | 2.8 |
| | *AL6E129 | 1.8 | 2.2 | 2.5 | 2.9 | 1.8 | 2.2 | 2.6 | 2.9 | 1.8 | 2.2 | 2.5 | 2.9 |
| | *AL6E148 | 1.9 | 2.3 | 2.7 | 3.0 | 1.9 | 2.3 | 2.7 | 3.1 | 1.9 | 2.3 | 2.7 | 3.0 |
| | *AL6E173 | 2.6 | 3.3 | 3.9 | 4.6 | 2.6 | 3.3 | 4.0 | 4.7 | 2.6 | 3.3 | 4.0 | 4.7 |
| | *AL6E194 | 2.6 | 3.2 | 3.9 | 4.6 | 2.6 | 3.3 | 4.0 | 4.7 | 2.6 | 3.3 | 4.0 | 4.7 |
| | *AL6E218 | 3.0 | 3.7 | 4.4 | 5.1 | 3.1 | 3.8 | 4.5 | 5.2 | 3.0 | 3.8 | 4.5 | 5.2 |
| | *AL6E237 | 2.9 | 3.6 | 4.3 | 5.0 | 2.9 | 3.7 | 4.4 | 5.1 | 2.9 | 3.6 | 4.3 | 5.1 |
| | *AL6E290 | 3.2 | 3.9 | 4.6 | 5.3 | 3.3 | 4.0 | 4.7 | 5.4 | 3.3 | 4.0 | 4.7 | 5.4 |
| | *AL6E343 | 3.9 | 4.6 | 5.3 | 6.0 | 4.0 | 4.7 | 5.4 | 6.1 | 3.9 | 4.6 | 5.4 | 6.1 |
| 4 FPI | *AL4E032 | 1.0 | 1.4 | 1.7 | 2.1 | 1.1 | 1.4 | 1.8 | 2.1 | 1.1 | 1.4 | 1.8 | 2.1 |
| | *AL4E040 | 1.2 | 1.5 | 1.9 | 2.2 | 1.2 | 1.5 | 1.9 | 2.2 | 1.2 | 1.5 | 1.9 | 2.2 |
| | *AL4E046 | 1.3 | 1.7 | 2.0 | 2.4 | 1.3 | 1.7 | 2.1 | 2.4 | 1.3 | 1.7 | 2.0 | 2.4 |
| | *AL4E061 | 1.3 | 1.7 | 2.0 | 2.4 | 1.3 | 1.7 | 2.0 | 2.4 | 1.3 | 1.7 | 2.0 | 2.4 |
| | *AL4E076 | 1.5 | 1.9 | 2.2 | 2.6 | 1.6 | 1.9 | 2.3 | 2.6 | 1.5 | 1.9 | 2.3 | 2.6 |
| | *AL4E099 | 1.8 | 2.1 | 2.5 | 2.8 | 1.8 | 2.2 | 2.5 | 2.9 | 1.8 | 2.2 | 2.5 | 2.9 |
| | *AL4E114 | 1.9 | 2.3 | 2.7 | 3.0 | 1.9 | 2.3 | 2.7 | 3.1 | 1.9 | 2.3 | 2.7 | 3.0 |
| | *AL4E133 | 2.3 | 2.6 | 3.0 | 3.4 | 2.3 | 2.7 | 3.0 | 3.4 | 2.3 | 2.6 | 3.0 | 3.4 |
| | *AL4E150 | 2.2 | 2.6 | 3.0 | 3.3 | 2.3 | 2.6 | 3.0 | 3.4 | 2.3 | 2.6 | 3.0 | 3.4 |
| | *AL4E170 | 2.7 | 3.1 | 3.4 | 3.8 | 2.7 | 3.1 | 3.5 | 3.9 | 2.7 | 3.1 | 3.5 | 3.8 |
| | *AL4E184 | 2.9 | 3.6 | 4.3 | 4.9 | 2.9 | 3.6 | 4.3 | 5.0 | 2.9 | 3.6 | 4.3 | 5.0 |
| | *AL4E232 | 3.2 | 3.9 | 4.6 | 5.3 | 3.3 | 4.0 | 4.7 | 5.4 | 3.3 | 4.0 | 4.7 | 5.4 |
| | *AL4E281 | 3.9 | 4.6 | 5.3 | 6.0 | 4.0 | 4.7 | 5.4 | 6.1 | 3.9 | 4.6 | 5.4 | 6.1 |

**LOW PROFILE UNIT COOLERS:** Minimum Room Area ($A_{min}$) - sq. ft.

| Generic Model | | R454A | | | | R454C | | | | R455A | | | |
|---|---|---|---|---|---|---|---|---|---|---|---|---|---|
| | | 10' | 20' | 30' | 40' | 10' | 20' | 30' | 40' | 10' | 20' | 30' | 40' |
| **AIR DEFROST** | | | | | | | | | | | | | |
| 6 FPI | *AL6A050 | 18 | 23 | 29 | 35 | 17 | 23 | 28 | 34 | 16 | 21 | 26 | 31 |
| | *AL6A062 | 20 | 25 | 31 | 37 | 19 | 24 | 30 | 36 | 17 | 22 | 27 | 32 |
| | *AL6A081 | 22 | 28 | 33 | 39 | 21 | 27 | 32 | 38 | 19 | 24 | 29 | 34 |
| | *AL6A088 | 21 | 27 | 33 | 39 | 21 | 26 | 32 | 37 | 19 | 24 | 29 | 34 |
| | *AL6A113 | 26 | 32 | 38 | 44 | 25 | 30 | 36 | 42 | 23 | 28 | 33 | 38 |
| | *AL6A141 | 28 | 34 | 40 | 46 | 27 | 32 | 38 | 44 | 24 | 30 | 35 | 40 |
| | *AL6A159 | 30 | 36 | 42 | 48 | 29 | 34 | 40 | 46 | 26 | 31 | 37 | 42 |
| | *AL6A170 | 29 | 35 | 41 | 47 | 28 | 34 | 40 | 46 | 26 | 31 | 36 | 42 |
| | *AL6A196 | 36 | 47 | 58 | 69 | 35 | 46 | 57 | 67 | 32 | 42 | 52 | 61 |
| | *AL6A220 | 42 | 53 | 64 | 76 | 41 | 52 | 62 | 73 | 37 | 47 | 57 | 67 |
| | *AL6A234 | 40 | 51 | 62 | 73 | 38 | 49 | 60 | 71 | 35 | 45 | 55 | 65 |
| | *AL6A289 | 43 | 54 | 66 | 77 | 41 | 52 | 64 | 75 | 38 | 48 | 58 | 68 |
| | *AL6A316 | 50 | 62 | 73 | 85 | 48 | 60 | 71 | 82 | 44 | 54 | 65 | 75 |
| | *AL6A375 | 58 | 69 | 81 | 93 | 56 | 67 | 78 | 90 | 51 | 61 | 72 | 82 |
| | *AL6A404 | 60 | 71 | 83 | 94 | 58 | 69 | 80 | 91 | 53 | 63 | 73 | 83 |
| | *AL6A477 | 65 | 77 | 88 | 100 | 63 | 74 | 85 | 97 | 58 | 68 | 78 | 88 |
| **ELECTRIC DEFROST** | | | | | | | | | | | | | |
| 6 FPI | *AL6E042 | 17 | 23 | 28 | 34 | 17 | 22 | 27 | 33 | 15 | 20 | 25 | 30 |
| | *AL6E051 | 19 | 25 | 31 | 37 | 19 | 24 | 30 | 35 | 17 | 22 | 27 | 32 |
| | *AL6E058 | 21 | 27 | 33 | 38 | 21 | 26 | 32 | 37 | 19 | 24 | 29 | 34 |
| | *AL6E079 | 21 | 27 | 33 | 38 | 21 | 26 | 32 | 37 | 19 | 24 | 29 | 34 |
| | *AL6E092 | 25 | 31 | 36 | 42 | 24 | 30 | 35 | 41 | 22 | 27 | 32 | 37 |
| | *AL6E110 | 27 | 32 | 38 | 44 | 26 | 31 | 37 | 43 | 24 | 29 | 34 | 39 |
| | *AL6E129 | 29 | 35 | 41 | 47 | 28 | 34 | 40 | 45 | 26 | 31 | 36 | 41 |
| | *AL6E148 | 31 | 37 | 43 | 49 | 30 | 36 | 42 | 47 | 28 | 33 | 38 | 43 |
| | *AL6E173 | 42 | 53 | 64 | 75 | 40 | 51 | 62 | 72 | 37 | 47 | 56 | 66 |
| | *AL6E194 | 41 | 52 | 63 | 74 | 40 | 51 | 61 | 72 | 37 | 46 | 56 | 66 |
| | *AL6E218 | 49 | 60 | 71 | 83 | 47 | 58 | 69 | 80 | 43 | 53 | 63 | 73 |
| | *AL6E237 | 47 | 58 | 69 | 81 | 45 | 56 | 67 | 78 | 41 | 51 | 61 | 71 |
| | *AL6E290 | 52 | 63 | 75 | 86 | 51 | 61 | 72 | 83 | 46 | 56 | 66 | 76 |
| | *AL6E343 | 63 | 74 | 85 | 97 | 61 | 72 | 83 | 94 | 56 | 66 | 76 | 85 |
| 4 FPI | *AL4E032 | 17 | 23 | 28 | 34 | 17 | 22 | 27 | 33 | 15 | 20 | 25 | 30 |
| | *AL4E040 | 19 | 25 | 30 | 36 | 19 | 24 | 29 | 35 | 17 | 22 | 27 | 32 |
| | *AL4E046 | 21 | 27 | 33 | 38 | 21 | 26 | 32 | 37 | 19 | 24 | 29 | 34 |
| | *AL4E061 | 21 | 27 | 33 | 38 | 21 | 26 | 32 | 37 | 19 | 24 | 29 | 34 |
| | *AL4E076 | 25 | 31 | 36 | 42 | 24 | 30 | 35 | 41 | 22 | 27 | 32 | 37 |
| | *AL4E099 | 29 | 35 | 40 | 46 | 28 | 34 | 39 | 45 | 26 | 31 | 36 | 41 |
| | *AL4E114 | 31 | 37 | 43 | 49 | 30 | 36 | 42 | 47 | 28 | 33 | 38 | 43 |
| | *AL4E133 | 36 | 42 | 48 | 54 | 35 | 41 | 47 | 52 | 32 | 37 | 43 | 48 |
| | *AL4E150 | 36 | 42 | 48 | 54 | 35 | 41 | 47 | 52 | 32 | 37 | 43 | 48 |
| | *AL4E170 | 43 | 49 | 55 | 61 | 42 | 48 | 53 | 59 | 38 | 44 | 49 | 54 |
| | *AL4E184 | 47 | 58 | 68 | 79 | 45 | 56 | 67 | 77 | 41 | 51 | 61 | 70 |
| | *AL4E232 | 52 | 63 | 75 | 86 | 51 | 61 | 72 | 83 | 46 | 56 | 66 | 76 |
| | *AL4E281 | 63 | 74 | 85 | 97 | 61 | 72 | 83 | 94 | 56 | 66 | 76 | 85 |

**CENTER MOUNT UNIT COOLERS -** Maximum Releasable Charge ($m_{rel}$) - lb

| Generic Model | | R454A | | | | R454C | | | | R455A | | | |
|---|---|---|---|---|---|---|---|---|---|---|---|---|---|
| | | 10' | 20' | 30' | 40' | 10' | 20' | 30' | 40' | 10' | 20' | 30' | 40' |
| **AIR DEFROST** | | | | | | | | | | | | | |
| 6 FPI | *AE6A051 | 1.3 | 1.6 | 2.0 | 2.3 | 1.3 | 1.6 | 2.0 | 2.4 | 1.3 | 1.6 | 2.0 | 2.3 |
| | *AE6A085 | 1.4 | 1.8 | 2.1 | 2.5 | 1.4 | 1.8 | 2.2 | 2.5 | 1.4 | 1.8 | 2.2 | 2.5 |
| | *AE6A103 | 1.6 | 2.0 | 2.4 | 2.8 | 1.7 | 2.0 | 2.4 | 2.8 | 1.6 | 2.0 | 2.4 | 2.8 |
| | *AE6A128 | 1.7 | 2.1 | 2.5 | 2.9 | 1.8 | 2.1 | 2.5 | 2.9 | 1.7 | 2.1 | 2.5 | 2.9 |
| | *AE6A157 | 2.1 | 2.4 | 2.8 | 3.2 | 2.1 | 2.5 | 2.9 | 3.2 | 2.1 | 2.5 | 2.8 | 3.2 |
| | *AE6A173 | 2.1 | 2.4 | 2.8 | 3.2 | 2.1 | 2.5 | 2.8 | 3.2 | 2.1 | 2.5 | 2.8 | 3.2 |
| | *AE6A207 | 2.4 | 2.8 | 3.2 | 3.6 | 2.5 | 2.8 | 3.2 | 3.6 | 2.4 | 2.8 | 3.2 | 3.6 |
| | *AE6A249 | 3.2 | 3.9 | 4.7 | 5.4 | 3.2 | 4.0 | 4.7 | 5.4 | 3.2 | 4.0 | 4.7 | 5.4 |
| | *AE6A316 | 4.2 | 4.9 | 5.6 | 6.3 | 4.2 | 5.0 | 5.7 | 6.4 | 4.2 | 4.9 | 5.7 | 6.4 |
| **ELECTRIC DEFROST** | | | | | | | | | | | | | |
| 6 FPI | *AE6E045 | 1.1 | 1.5 | 1.8 | 2.2 | 1.1 | 1.5 | 1.9 | 2.2 | 1.1 | 1.5 | 1.9 | 2.2 |
| | *AE6E054 | 1.2 | 1.6 | 1.9 | 2.3 | 1.2 | 1.6 | 2.0 | 2.3 | 1.2 | 1.6 | 2.0 | 2.3 |
| | *AE6E090 | 1.5 | 1.8 | 2.2 | 2.5 | 1.5 | 1.8 | 2.2 | 2.6 | 1.5 | 1.8 | 2.2 | 2.5 |
| | *AE6E107 | 1.6 | 2.0 | 2.4 | 2.8 | 1.7 | 2.0 | 2.4 | 2.8 | 1.7 | 2.0 | 2.4 | 2.8 |
| | *AE6E129 | 1.7 | 2.1 | 2.5 | 2.8 | 1.8 | 2.1 | 2.5 | 2.9 | 1.7 | 2.1 | 2.5 | 2.9 |
| | *AE6E149 | 2.0 | 2.4 | 2.7 | 3.1 | 2.0 | 2.4 | 2.8 | 3.1 | 2.0 | 2.4 | 2.8 | 3.1 |
| | *AE6E160 | 2.0 | 2.4 | 2.7 | 3.1 | 2.0 | 2.4 | 2.8 | 3.1 | 2.0 | 2.4 | 2.7 | 3.1 |
| | *AE6E217 | 2.7 | 3.4 | 4.1 | 4.8 | 2.7 | 3.5 | 4.2 | 4.9 | 2.7 | 3.4 | 4.1 | 4.8 |
| | *AE6E265 | 3.1 | 3.8 | 4.5 | 5.2 | 3.2 | 3.9 | 4.6 | 5.3 | 3.1 | 3.8 | 4.6 | 5.3 |
| | *AE6E337 | 4.0 | 4.7 | 5.4 | 6.1 | 4.1 | 4.8 | 5.5 | 6.2 | 4.1 | 4.8 | 5.5 | 6.2 |
| 4 FPI | *AE4E043 | 1.2 | 1.6 | 1.9 | 2.3 | 1.2 | 1.6 | 2.0 | 2.3 | 1.2 | 1.6 | 2.0 | 2.3 |
| | *AE4E087 | 1.6 | 1.9 | 2.3 | 2.7 | 1.6 | 2.0 | 2.3 | 2.7 | 1.6 | 2.0 | 2.3 | 2.7 |
| | *AE4E127 | 2.0 | 2.4 | 2.7 | 3.1 | 2.0 | 2.4 | 2.8 | 3.1 | 2.0 | 2.4 | 2.8 | 3.1 |
| | *AE4E183 | 2.4 | 2.7 | 3.1 | 3.5 | 2.4 | 2.8 | 3.1 | 3.5 | 2.4 | 2.7 | 3.1 | 3.5 |
| | *AE4E222 | 3.1 | 3.8 | 4.5 | 5.2 | 3.2 | 3.9 | 4.6 | 5.3 | 3.1 | 3.8 | 4.6 | 5.3 |
| | *AE4E283 | 4.0 | 4.7 | 5.4 | 6.1 | 4.1 | 4.8 | 5.5 | 6.2 | 4.1 | 4.8 | 5.5 | 6.2 |

**CENTER MOUNT UNIT COOLERS -** Minimum Room Area ($A_{min}$) - sq. ft.

| Generic Model | | R454A | | | | R454C | | | | R455A | | | |
|---|---|---|---|---|---|---|---|---|---|---|---|---|---|
| | | 10' | 20' | 30' | 40' | 10' | 20' | 30' | 40' | 10' | 20' | 30' | 40' |
| **AIR DEFROST** | | | | | | | | | | | | | |
| 6 FPI | *AE6A051 | 20 | 26 | 31 | 37 | 19 | 25 | 30 | 36 | 18 | 23 | 28 | 33 |
| | *AE6A085 | 23 | 29 | 34 | 40 | 22 | 28 | 33 | 39 | 20 | 25 | 30 | 35 |
| | *AE6A103 | 26 | 32 | 38 | 44 | 25 | 31 | 37 | 43 | 23 | 28 | 34 | 39 |
| | *AE6A128 | 28 | 34 | 40 | 46 | 27 | 33 | 38 | 44 | 24 | 30 | 35 | 40 |
| | *AE6A157 | 33 | 39 | 45 | 51 | 32 | 38 | 43 | 49 | 29 | 34 | 40 | 45 |
| | *AE6A173 | 33 | 39 | 45 | 51 | 32 | 38 | 43 | 49 | 29 | 34 | 40 | 45 |
| | *AE6A207 | 39 | 45 | 51 | 57 | 38 | 43 | 49 | 55 | 34 | 40 | 45 | 50 |
| | *AE6A249 | 51 | 63 | 74 | 86 | 50 | 61 | 72 | 83 | 45 | 55 | 66 | 76 |
| | *AE6A316 | 67 | 78 | 90 | 101 | 64 | 76 | 87 | 98 | 59 | 69 | 79 | 89 |
| **ELECTRIC DEFROST** | | | | | | | | | | | | | |
| 6 FPI | *AE6E045 | 18 | 24 | 29 | 35 | 17 | 23 | 29 | 34 | 16 | 21 | 26 | 31 |
| | *AE6E054 | 20 | 25 | 31 | 37 | 19 | 24 | 30 | 36 | 17 | 22 | 27 | 32 |
| | *AE6E090 | 23 | 29 | 35 | 40 | 22 | 28 | 33 | 39 | 20 | 26 | 31 | 36 |
| | *AE6E107 | 26 | 32 | 38 | 44 | 25 | 31 | 37 | 43 | 23 | 28 | 34 | 39 |
| | *AE6E129 | 28 | 33 | 39 | 45 | 27 | 32 | 38 | 44 | 24 | 30 | 35 | 40 |
| | *AE6E149 | 32 | 38 | 44 | 50 | 31 | 37 | 42 | 48 | 28 | 33 | 39 | 44 |
| | *AE6E160 | 32 | 38 | 44 | 49 | 31 | 36 | 42 | 48 | 28 | 33 | 38 | 44 |
| | *AE6E217 | 43 | 54 | 66 | 77 | 42 | 53 | 64 | 74 | 38 | 48 | 58 | 68 |
| | *AE6E265 | 50 | 61 | 72 | 83 | 48 | 59 | 70 | 81 | 44 | 54 | 64 | 74 |
| | *AE6E337 | 64 | 76 | 87 | 98 | 62 | 73 | 84 | 95 | 57 | 67 | 77 | 87 |
| 4 FPI | *AE4E043 | 20 | 25 | 31 | 37 | 19 | 24 | 30 | 36 | 17 | 22 | 27 | 32 |
| | *AE4E087 | 25 | 31 | 37 | 42 | 25 | 30 | 36 | 41 | 22 | 27 | 33 | 38 |
| | *AE4E127 | 32 | 38 | 44 | 50 | 31 | 37 | 42 | 48 | 28 | 33 | 39 | 44 |
| | *AE4E183 | 38 | 44 | 49 | 55 | 36 | 42 | 48 | 54 | 33 | 38 | 44 | 49 |
| | *AE4E222 | 50 | 61 | 72 | 83 | 48 | 59 | 70 | 81 | 44 | 54 | 64 | 74 |
| | *AE4E283 | 64 | 76 | 87 | 98 | 62 | 73 | 84 | 95 | 57 | 67 | 77 | 87 |

**LOW VELOCITY CENTER MOUNT UNIT COOLERS -** Maximum Releasable Charge ($m_{rel}$) - lb

| Generic Model | | R454A | | | | R454C | | | | R455A | | | |
|---|---|---|---|---|---|---|---|---|---|---|---|---|---|
| | | 10' | 20' | 30' | 40' | 10' | 20' | 30' | 40' | 10' | 20' | 30' | 40' |
| **AIR DEFROST** | | | | | | | | | | | | | |
| 6 FPI | *AV6A053 | 1.3 | 1.7 | 2.0 | 2.4 | 1.3 | 1.7 | 2.0 | 2.4 | 1.3 | 1.7 | 2.0 | 2.4 |
| | *AV6A066 | 1.2 | 1.5 | 1.9 | 2.2 | 1.2 | 1.5 | 1.9 | 2.3 | 1.2 | 1.5 | 1.9 | 2.2 |
| | *AV6A105 | 1.7 | 2.1 | 2.5 | 2.9 | 1.8 | 2.1 | 2.5 | 2.9 | 1.7 | 2.1 | 2.5 | 2.9 |
| | *AV6A 13 | 2.0 | 2.4 | 2.8 | 3.2 | 2.1 | 2.4 | 2.8 | 3.2 | 2.1 | 2.4 | 2.8 | 3.2 |
| | *AV6A159 | 2.2 | 2.6 | 3.0 | 3.4 | 2.3 | 2.6 | 3.0 | 3.4 | 2.2 | 2.6 | 3.0 | 3.4 |
| | *AV6A196 | 2.7 | 3.0 | 3.4 | 3.8 | 2.7 | 3.1 | 3.4 | 3.8 | 2.7 | 3.0 | 3.4 | 3.8 |
| | *AV6A216 | 2.6 | 3.0 | 3.4 | 3.8 | 2.7 | 3.1 | 3.4 | 3.8 | 2.7 | 3.0 | 3.4 | 3.8 |
| | *AV6A270 | 3.6 | 4.3 | 5.0 | 5.7 | 3.6 | 4.3 | 5.1 | 5.8 | 3.6 | 4.3 | 5.0 | 5.8 |
| | *AV6A338 | 4.2 | 4.9 | 5.6 | 6.4 | 4.3 | 5.0 | 5.7 | 6.5 | 4.2 | 5.0 | 5.7 | 6.4 |
| **ELECTRIC DEFROST** | | | | | | | | | | | | | |
| 6 FPI | *AV6E053 | 1.3 | 1.6 | 2.0 | 2.3 | 1.3 | 1.6 | 2.0 | 2.3 | 1.3 | 1.6 | 2.0 | 2.3 |
| | *AV6E066 | 1.4 | 1.8 | 2.1 | 2.4 | 1.4 | 1.8 | 2.1 | 2.5 | 1.4 | 1.8 | 2.1 | 2.5 |
| | *AV6E105 | 1.7 | 2.0 | 2.4 | 2.7 | 1.7 | 2.1 | 2.4 | 2.8 | 1.7 | 2.0 | 2.4 | 2.8 |
| | *AV6E131 | 2.0 | 2.3 | 2.7 | 3.0 | 2.0 | 2.4 | 2.7 | 3.1 | 2.0 | 2.3 | 2.7 | 3.1 |
| | *AV6E159 | 2.1 | 2.5 | 2.9 | 3.2 | 2.2 | 2.5 | 2.9 | 3.3 | 2.2 | 2.5 | 2.9 | 3.2 |
| | *AV6E196 | 2.5 | 2.9 | 3.3 | 3.6 | 2.6 | 2.9 | 3.3 | 3.7 | 2.6 | 2.9 | 3.3 | 3.6 |
| | *AV6E216 | 2.5 | 2.9 | 3.2 | 3.6 | 2.6 | 2.9 | 3.3 | 3.7 | 2.6 | 2.9 | 3.3 | 3.6 |
| | *AV6E270 | 3.4 | 4.1 | 4.8 | 5.5 | 3.5 | 4.2 | 4.9 | 5.6 | 3.4 | 4.1 | 4.8 | 5.5 |
| | *AV6E338 | 4.0 | 4.7 | 5.4 | 6.1 | 4.1 | 4.8 | 5.5 | 6.2 | 4.1 | 4.7 | 5.4 | 6.1 |

**LOW VELOCITY CENTER MOUNT UNIT COOLERS -** Minimum Room Area ($A_{min}$) - sq. ft.

| Generic Model | | R454A | | | | R454C | | | | R455A | | | |
|---|---|---|---|---|---|---|---|---|---|---|---|---|---|
| | | 10' | 20' | 30' | 40' | 10' | 20' | 30' | 40' | 10' | 20' | 30' | 40' |
| **AIR DEFROST** | | | | | | | | | | | | | |
| 6 FPI | *AV6A053 | 21 | 27 | 32 | 38 | 20 | 26 | 31 | 37 | 18 | 23 | 28 | 33 |
| | *AV6A066 | 18 | 24 | 30 | 35 | 18 | 23 | 29 | 34 | 16 | 21 | 26 | 31 |
| | *AV6A105 | 28 | 34 | 40 | 46 | 27 | 33 | 38 | 44 | 24 | 30 | 35 | 40 |
| | *AV6A 13 | 33 | 39 | 45 | 51 | 31 | 37 | 43 | 49 | 29 | 34 | 39 | 45 |
| | *AV6A159 | 36 | 42 | 48 | 54 | 34 | 40 | 46 | 52 | 31 | 37 | 42 | 47 |
| | *AV6A196 | 42 | 48 | 54 | 60 | 41 | 47 | 53 | 58 | 37 | 43 | 48 | 53 |
| | *AV6A216 | 42 | 48 | 54 | 60 | 41 | 47 | 52 | 58 | 37 | 43 | 48 | 53 |
| | *AV6A270 | 57 | 68 | 80 | 91 | 55 | 66 | 77 | 88 | 50 | 60 | 70 | 81 |
| | *AV6A338 | 67 | 79 | 90 | 102 | 65 | 76 | 87 | 98 | 59 | 69 | 80 | 90 |
| **ELECTRIC DEFROST** | | | | | | | | | | | | | |
| 6 FPI | *AV6E053 | 20 | 26 | 31 | 37 | 20 | 25 | 30 | 36 | 18 | 23 | 28 | 33 |
| | *AV6E066 | 23 | 28 | 34 | 39 | 22 | 27 | 33 | 38 | 20 | 25 | 30 | 35 |
| | *AV6E105 | 27 | 32 | 38 | 44 | 26 | 31 | 37 | 42 | 24 | 29 | 34 | 39 |
| | *AV6E131 | 31 | 37 | 43 | 48 | 30 | 36 | 41 | 47 | 28 | 33 | 38 | 43 |
| | *AV6E159 | 34 | 40 | 46 | 51 | 33 | 39 | 44 | 50 | 30 | 35 | 40 | 45 |
| | *AV6E196 | 41 | 46 | 52 | 58 | 39 | 45 | 50 | 56 | 36 | 41 | 46 | 51 |
| | *AV6E216 | 40 | 46 | 52 | 57 | 39 | 45 | 50 | 56 | 36 | 41 | 46 | 51 |
| | *AV6E270 | 54 | 65 | 76 | 87 | 53 | 63 | 74 | 85 | 48 | 58 | 68 | 77 |
| | *AV6E338 | 64 | 75 | 86 | 97 | 62 | 73 | 84 | 94 | 57 | 66 | 76 | 86 |

**MEDIUM PROFILE UNIT COOLERS -** Maximum Releasable Charge ($m_{rel}$) - lb

| Generic Model | | R454A | | | | R454C | | | | R455A | | | |
|---|---|---|---|---|---|---|---|---|---|---|---|---|---|
| | | 10' | 20' | 30' | 40' | 10' | 20' | 30' | 40' | 10' | 20' | 30' | 40' |
| **AIR DEFROST** | | | | | | | | | | | | | |
| 6 FPI | *AM6A219 | 3.34 | 4.06 | 4.79 | 5.51 | 3.37 | 4.11 | 4.84 | 5.57 | 3.36 | 4.09 | 4.81 | 5.54 |
| | *AM6A268 | 3.83 | 4.55 | 5.27 | 6.00 | 3.87 | 4.60 | 5.33 | 6.07 | 3.85 | 4.58 | 5.31 | 6.03 |
| | *AM6A336 | 3.85 | 4.57 | 5.30 | 6.02 | 3.89 | 4.62 | 5.36 | 6.09 | 3.87 | 4.60 | 5.33 | 6.05 |
| | *AM6A448 | 4.83 | 5.59 | 6.34 | 7.10 | 4.88 | 5.64 | 6.41 | 7.17 | 4.85 | 5.62 | 6.38 | 7.14 |
| | *AM6A540 | 6.16 | 7.31 | 8.46 | 9.62 | 6.23 | 7.40 | 8.57 | 9.74 | 6.20 | 7.36 | 8.52 | 9.68 |
| | *AM6A668 | 6.68 | 7.83 | 8.98 | 10.13 | 6.76 | 7.93 | 9.09 | 10.26 | 6.72 | 7.88 | 9.04 | 10.20 |
| | *AM6A800 | 8.12 | 9.31 | 10.51 | 11.70 | 8.22 | 9.42 | 10.63 | 11.84 | 8.17 | 9.37 | 10.57 | 11.77 |
| | *AM6A888 | 9.22 | 11.44 | 13.67 | 15.89 | 9.34 | 11.60 | 13.87 | 16.13 | 9.28 | 11.53 | 13.77 | 16.02 |
| | *AM6A990 | 11.07 | 13.29 | 15.52 | 17.74 | 11.22 | 13.48 | 15.74 | 18.01 | 11.15 | 13.39 | 15.64 | 17.88 |
| **MT ELECTRIC DEFROST** | | | | | | | | | | | | | |
| 6 FPI | *AM6D218 | 3.34 | 4.06 | 4.79 | 5.51 | 3.37 | 4.11 | 4.84 | 5.57 | 3.36 | 4.09 | 4.81 | 5.54 |
| | *AM6D267 | 3.83 | 4.55 | 5.27 | 6.00 | 3.87 | 4.60 | 5.33 | 6.07 | 3.85 | 4.58 | 5.31 | 6.03 |
| | *AM6D335 | 3.85 | 4.57 | 5.30 | 6.02 | 3.89 | 4.62 | 5.36 | 6.09 | 3.87 | 4.60 | 5.33 | 6.05 |
| | *AM6D447 | 4.83 | 5.59 | 6.34 | 7.10 | 4.88 | 5.64 | 6.41 | 7.17 | 4.85 | 5.62 | 6.38 | 7.14 |
| | *AM6D539 | 6.16 | 7.31 | 8.46 | 9.62 | 6.23 | 7.40 | 8.57 | 9.74 | 6.20 | 7.36 | 8.52 | 9.68 |
| | *AM6D667 | 6.68 | 7.83 | 8.98 | 10.13 | 6.76 | 7.93 | 9.09 | 10.26 | 6.72 | 7.88 | 9.04 | 10.20 |
| | *AM6D799 | 8.12 | 9.31 | 10.51 | 11.70 | 8.22 | 9.42 | 10.63 | 11.84 | 8.17 | 9.37 | 10.57 | 11.77 |
| | *AM6D887 | 9.22 | 11.44 | 13.67 | 15.89 | 9.34 | 11.60 | 13.87 | 16.13 | 9.28 | 11.53 | 13.77 | 16.02 |
| | *AM6D989 | 11.07 | 13.29 | 15.52 | 17.74 | 11.22 | 13.48 | 15.74 | 18.01 | 11.15 | 13.39 | 15.64 | 17.88 |
| **LT ELECTRIC DEFROST** | | | | | | | | | | | | | |
| 6 FPI | *AM6E181 | 3.31 | 4.01 | 4.72 | 5.42 | 3.35 | 4.06 | 4.78 | 5.49 | 3.33 | 4.04 | 4.75 | 5.46 |
| | *AM6E217 | 3.77 | 4.48 | 5.18 | 5.89 | 3.82 | 4.54 | 5.25 | 5.97 | 3.80 | 4.51 | 5.22 | 5.93 |
| | *AM6E371 | 4.82 | 5.54 | 6.27 | 6.99 | 4.88 | 5.62 | 6.35 | 7.09 | 4.85 | 5.58 | 6.31 | 7.04 |
| | *AM6E446 | 6.16 | 7.34 | 8.51 | 9.68 | 6.25 | 7.44 | 8.62 | 9.81 | 6.21 | 7.39 | 8.57 | 9.75 |
| | *AM6E557 | 6.83 | 8.00 | 9.18 | 10.35 | 6.93 | 8.12 | 9.31 | 10.49 | 6.89 | 8.07 | 9.24 | 10.42 |
| | *AM6E669 | 8.17 | 9.34 | 10.51 | 11.68 | 8.30 | 9.48 | 10.67 | 11.85 | 8.24 | 9.42 | 10.60 | 11.77 |
| | *AM6E741 | 8.14 | 9.31 | 10.48 | 11.65 | 8.26 | 9.45 | 10.63 | 11.82 | 8.21 | 9.38 | 10.56 | 11.74 |
| | *AM6E890 | 11.28 | 13.55 | 15.82 | 18.08 | 11.47 | 13.77 | 16.07 | 18.37 | 11.38 | 13.67 | 15.95 | 18.24 |
| 4 FPI | *AM4E129 | 3.28 | 3.97 | 4.66 | 5.34 | 3.32 | 4.02 | 4.72 | 5.42 | 3.30 | 4.00 | 4.69 | 5.39 |
| | *AM4E168 | 3.76 | 4.47 | 5.17 | 5.88 | 3.81 | 4.53 | 5.25 | 5.96 | 3.79 | 4.50 | 5.21 | 5.92 |
| | *AM4E271 | 4.71 | 5.44 | 6.16 | 6.89 | 4.78 | 5.51 | 6.25 | 6.98 | 4.75 | 5.48 | 6.21 | 6.94 |
| | *AM4E340 | 5.61 | 6.33 | 7.06 | 7.78 | 5.69 | 6.42 | 7.16 | 7.89 | 5.65 | 6.38 | 7.11 | 7.84 |
| | *AM4E398 | 6.17 | 6.95 | 7.72 | 8.50 | 6.26 | 7.04 | 7.82 | 8.60 | 6.22 | 6.99 | 7.77 | 8.55 |
| | *AM4E495 | 7.90 | 9.07 | 10.24 | 11.41 | 8.02 | 9.21 | 10.39 | 11.58 | 7.97 | 9.14 | 10.32 | 11.50 |
| | *AM4E529 | 8.14 | 9.31 | 10.48 | 11.65 | 8.26 | 9.45 | 10.63 | 11.82 | 8.21 | 9.38 | 10.56 | 11.74 |
| | *AM4E658 | 9.86 | 11.03 | 12.21 | 13.38 | 10.02 | 11.21 | 12.39 | 13.58 | 9.95 | 11.13 | 12.31 | 13.48 |

**MEDIUM PROFILE UNIT COOLERS -** Minimum Room Area ($A_{min}$) - sq. ft

| Generic Model | | R454A | | | | R454C | | | | R455A | | | |
|---|---|---|---|---|---|---|---|---|---|---|---|---|---|
| | | 10' | 20' | 30' | 40' | 10' | 20' | 30' | 40' | 10' | 20' | 30' | 40' |
| **AIR DEFROST** | | | | | | | | | | | | | |
| 6 FPI | *AM6A219 | 54 | 65 | 77 | 88 | 52 | 63 | 74 | 85 | 48 | 58 | 68 | 78 |
| | *AM6A268 | 62 | 73 | 85 | 96 | 59 | 71 | 82 | 93 | 54 | 65 | 75 | 85 |
| | *AM6A336 | 62 | 74 | 85 | 97 | 60 | 71 | 82 | 93 | 55 | 65 | 75 | 85 |
| | *AM6A448 | 78 | 90 | 102 | 114 | 75 | 87 | 98 | 110 | 68 | 79 | 90 | 100 |
| | *AM6A540 | 99 | 117 | 136 | 154 | 96 | 113 | 131 | 149 | 87 | 104 | 120 | 136 |
| | *AM6A668 | 107 | 125 | 144 | 162 | 103 | 121 | 139 | 157 | 95 | 111 | 127 | 143 |
| | *AM6A800 | 130 | 149 | 168 | 187 | 126 | 144 | 163 | 181 | 115 | 132 | 148 | 165 |
| | *AM6A888 | 148 | 183 | 219 | 254 | 143 | 177 | 212 | 246 | 130 | 162 | 193 | 225 |
| | *AM6A990 | 177 | 213 | 248 | 284 | 171 | 206 | 240 | 275 | 157 | 188 | 219 | 251 |
| **MT ELECTRIC DEFROST** | | | | | | | | | | | | | |
| 6 FPI | *AM6D218 | 54 | 65 | 77 | 88 | 52 | 63 | 74 | 85 | 48 | 58 | 68 | 78 |
| | *AM6D267 | 62 | 73 | 85 | 96 | 59 | 71 | 82 | 93 | 54 | 65 | 75 | 85 |
| | *AM6D335 | 62 | 74 | 85 | 97 | 60 | 71 | 82 | 93 | 55 | 65 | 75 | 85 |
| | *AM6D447 | 78 | 90 | 102 | 114 | 75 | 87 | 98 | 110 | 68 | 79 | 90 | 100 |
| | *AM6D539 | 99 | 117 | 136 | 154 | 96 | 113 | 131 | 149 | 87 | 104 | 120 | 136 |
| | *AM6D667 | 107 | 125 | 144 | 162 | 103 | 121 | 139 | 157 | 95 | 111 | 127 | 143 |
| | *AM6D799 | 130 | 149 | 168 | 187 | 126 | 144 | 163 | 181 | 115 | 132 | 148 | 165 |
| | *AM6D887 | 148 | 183 | 219 | 254 | 143 | 177 | 212 | 246 | 130 | 162 | 193 | 225 |
| | *AM6D989 | 177 | 213 | 248 | 284 | 171 | 206 | 240 | 275 | 157 | 188 | 219 | 251 |
| **LT ELECTRIC DEFROST** | | | | | | | | | | | | | |
| 6 FPI | *AM6E181 | 53 | 65 | 76 | 87 | 52 | 62 | 73 | 84 | 47 | 57 | 67 | 77 |
| | *AM6E217 | 61 | 72 | 83 | 94 | 59 | 70 | 81 | 92 | 54 | 64 | 74 | 84 |
| | *AM6E371 | 77 | 89 | 101 | 112 | 75 | 86 | 97 | 109 | 68 | 79 | 89 | 99 |
| | *AM6E446 | 99 | 118 | 136 | 155 | 96 | 114 | 132 | 150 | 87 | 104 | 120 | 137 |
| | *AM6E557 | 110 | 128 | 147 | 166 | 106 | 124 | 142 | 160 | 97 | 113 | 130 | 146 |
| | *AM6E669 | 131 | 150 | 168 | 187 | 127 | 145 | 163 | 181 | 116 | 132 | 149 | 165 |
| | *AM6E741 | 130 | 149 | 168 | 187 | 126 | 145 | 163 | 181 | 115 | 132 | 148 | 165 |
| | *AM6E890 | 181 | 217 | 253 | 289 | 175 | 210 | 245 | 281 | 160 | 192 | 224 | 256 |
| 4 FPI | *AM4E129 | 53 | 64 | 75 | 86 | 51 | 62 | 73 | 83 | 47 | 56 | 66 | 76 |
| | *AM4E168 | 61 | 72 | 83 | 94 | 59 | 70 | 80 | 91 | 54 | 64 | 73 | 83 |
| | *AM4E271 | 76 | 87 | 99 | 110 | 73 | 85 | 96 | 107 | 67 | 77 | 87 | 98 |
| | *AM4E340 | 90 | 102 | 113 | 125 | 87 | 98 | 110 | 121 | 80 | 90 | 100 | 110 |
| | *AM4E398 | 99 | 111 | 124 | 136 | 96 | 108 | 120 | 132 | 88 | 98 | 109 | 120 |
| | *AM4E495 | 127 | 145 | 164 | 183 | 123 | 141 | 159 | 177 | 112 | 128 | 145 | 161 |
| | *AM4E529 | 130 | 149 | 168 | 187 | 126 | 145 | 163 | 181 | 115 | 132 | 148 | 165 |
| | *AM4E658 | 158 | 177 | 195 | 214 | 153 | 171 | 189 | 208 | 140 | 156 | 173 | 189 |

## **HEAVY DUTY UNIT COOLERS -** Maximum Releasable Charge ($m_{rel}$) - lb

| Generic Model | | R454A | | | | R454C | | | | R455A | | | |
|---|---|---|---|---|---|---|---|---|---|---|---|---|---|
| | | 10' | 20' | 30' | 40' | 10' | 20' | 30' | 40' | 10' | 20' | 30' | 40' |
| **AIR DEFROST** | | | | | | | | | | | | | |
| 6 FPI | *AH6A038 | 5.4 | 6.2 | 6.9 | 7.6 | 5.5 | 6.2 | 7.0 | 7.7 | 5.5 | 6.2 | 6.9 | 7.7 |
| | *AH6A053 | 7.7 | 8.8 | 10.0 | 11.1 | 7.8 | 8.9 | 10.1 | 11.3 | 7.7 | 8.9 | 10.1 | 11.2 |
| | *AH6A064 | 9.5 | 10.7 | 11.9 | 13.1 | 9.6 | 10.8 | 12.0 | 13.2 | 9.5 | 10.7 | 11.9 | 13.1 |
| | *AH6A076 | 9.4 | 10.6 | 11.8 | 13.0 | 9.5 | 10.7 | 12.0 | 13.2 | 9.5 | 10.7 | 11.9 | 13.1 |
| | *AH6A108 | 14.3 | 16.6 | 19.0 | 21.3 | 14.5 | 16.9 | 19.2 | 21.6 | 14.4 | 16.7 | 19.1 | 21.4 |
| | *AH6A130 | 17.6 | 20.0 | 22.3 | 24.6 | 17.8 | 20.2 | 22.6 | 24.9 | 17.7 | 20.1 | 22.4 | 24.8 |
| | *AH6A162 | 19.1 | 21.5 | 23.8 | 26.1 | 19.4 | 21.8 | 24.1 | 26.5 | 19.3 | 21.6 | 24.0 | 26.3 |
| | *AH6A193 | 24.1 | 26.4 | 28.8 | 31.1 | 24.4 | 26.8 | 29.1 | 31.5 | 24.3 | 26.6 | 28.9 | 31.3 |
| | *AH6A215 | 24.0 | 26.4 | 28.7 | 31.0 | 24.3 | 26.7 | 29.1 | 31.4 | 24.2 | 26.5 | 28.9 | 31.2 |
| | *AH6A263 | 32.1 | 35.9 | 39.6 | 43.4 | 32.5 | 36.4 | 40.2 | 44.1 | 32.3 | 36.1 | 39.9 | 43.8 |
| **MT ELECTRIC DEFROST** | | | | | | | | | | | | | |
| 6 FPI | *AH6D037 | 5.4 | 6.2 | 6.9 | 7.6 | 5.5 | 6.2 | 7.0 | 7.7 | 5.5 | 6.2 | 6.9 | 7.7 |
| | *AH6D052 | 7.7 | 8.8 | 10.0 | 11.1 | 7.8 | 8.9 | 10.1 | 11.3 | 7.7 | 8.9 | 10.1 | 11.2 |
| | *AH6D063 | 9.5 | 10.7 | 11.9 | 13.1 | 9.6 | 10.8 | 12.0 | 13.2 | 9.5 | 10.7 | 11.9 | 13.1 |
| | *AH6D077 | 9.4 | 10.6 | 11.8 | 13.0 | 9.5 | 10.7 | 12.0 | 13.2 | 9.5 | 10.7 | 11.9 | 13.1 |
| | *AH6D107 | 14.3 | 16.6 | 19.0 | 21.3 | 14.5 | 16.9 | 19.2 | 21.6 | 14.4 | 16.7 | 19.1 | 21.4 |
| | *AH6D129 | 17.6 | 20.0 | 22.3 | 24.6 | 17.8 | 20.2 | 22.6 | 24.9 | 17.7 | 20.1 | 22.4 | 24.8 |
| | *AH6D161 | 19.1 | 21.5 | 23.8 | 26.1 | 19.4 | 21.8 | 24.1 | 26.5 | 19.3 | 21.6 | 24.0 | 26.3 |
| | *AH6D192 | 24.1 | 26.4 | 28.8 | 31.1 | 24.4 | 26.8 | 29.1 | 31.5 | 24.3 | 26.6 | 28.9 | 31.3 |
| | *AH6D214 | 24.0 | 26.4 | 28.7 | 31.0 | 24.3 | 26.7 | 29.1 | 31.4 | 24.2 | 26.5 | 28.9 | 31.2 |
| | *AH6D262 | 32.1 | 35.9 | 39.6 | 43.4 | 32.5 | 36.4 | 40.2 | 44.1 | 32.3 | 36.1 | 39.9 | 43.8 |
| **LT ELECTRIC DEFROST** | | | | | | | | | | | | | |
| 6 FPI | *AH6E040 | 5.9 | 6.7 | 7.5 | 8.3 | 6.0 | 6.8 | 7.6 | 8.4 | 6.0 | 6.8 | 7.6 | 8.3 |
| | *AH6E053 | 8.0 | 9.1 | 10.3 | 11.5 | 8.1 | 9.3 | 10.5 | 11.6 | 8.0 | 9.2 | 10.4 | 11.6 |
| | *AH6E065 | 9.6 | 10.7 | 11.9 | 13.1 | 9.7 | 10.9 | 12.1 | 13.3 | 9.7 | 10.8 | 12.0 | 13.2 |
| | *AH6E080 | 10.5 | 12.7 | 14.9 | 17.1 | 10.7 | 12.9 | 15.2 | 17.4 | 10.6 | 12.8 | 15.0 | 17.3 |
| | *AH6E106 | 14.8 | 17.1 | 19.5 | 21.8 | 15.0 | 17.4 | 19.7 | 22.1 | 14.9 | 17.2 | 19.6 | 22.0 |
| | *AH6E131 | 17.9 | 20.2 | 22.6 | 24.9 | 18.2 | 20.6 | 22.9 | 25.3 | 18.0 | 20.4 | 22.8 | 25.1 |
| | *AH6E160 | 19.4 | 21.8 | 24.1 | 26.5 | 19.8 | 22.1 | 24.5 | 26.9 | 19.6 | 22.0 | 24.3 | 26.7 |
| | *AH6E188 | 25.6 | 29.4 | 33.2 | 37.0 | 26.1 | 29.9 | 33.8 | 37.6 | 25.8 | 29.7 | 33.5 | 37.3 |
| | *AH6E237 | 31.7 | 35.5 | 39.3 | 43.1 | 32.3 | 36.1 | 40.0 | 43.9 | 32.0 | 35.9 | 39.7 | 43.5 |
| 4 FPI | *AH4E043 | 8.0 | 9.1 | 10.3 | 11.5 | 8.1 | 9.3 | 10.5 | 11.6 | 8.0 | 9.2 | 10.4 | 11.6 |
| | *AH4E053 | 9.6 | 10.7 | 11.9 | 13.1 | 9.7 | 10.9 | 12.1 | 13.3 | 9.7 | 10.8 | 12.0 | 13.2 |
| | *AH4E086 | 13.6 | 15.8 | 18.0 | 20.2 | 13.9 | 16.1 | 18.3 | 20.6 | 13.8 | 16.0 | 18.2 | 20.4 |
| | *AH4E105 | 17.9 | 20.2 | 22.6 | 24.9 | 18.2 | 20.6 | 22.9 | 25.3 | 18.0 | 20.4 | 22.8 | 25.1 |
| | *AH4E128 | 19.4 | 21.8 | 24.1 | 26.5 | 19.8 | 22.1 | 24.5 | 26.9 | 19.6 | 22.0 | 24.3 | 26.7 |
| | *AH4E158 | 24.2 | 26.5 | 28.8 | 31.2 | 24.6 | 26.9 | 29.3 | 31.7 | 24.4 | 26.7 | 29.1 | 31.5 |
| | *AH4E198 | 31.7 | 35.5 | 39.3 | 43.1 | 32.3 | 36.1 | 40.0 | 43.9 | 32.0 | 35.9 | 39.7 | 43.5 |

**HEAVY DUTY UNIT COOLERS -** Minimum Room Area ($A_{min}$) - sq. ft.

| Generic Model | | R454A | | | | R454C | | | | R455A | | | |
|---|---|---|---|---|---|---|---|---|---|---|---|---|---|
| | | 10' | 20' | 30' | 40' | 10' | 20' | 30' | 40' | 10' | 20' | 30' | 40' |
| **AIR DEFROST** | | | | | | | | | | | | | |
| 6 FPI | *AH6A038 | 87 | 99 | 110 | 122 | 84 | 96 | 107 | 118 | 77 | 87 | 98 | 108 |
| | *AH6A053 | 123 | 142 | 160 | 178 | 119 | 137 | 155 | 173 | 109 | 125 | 141 | 157 |
| | *AH6A064 | 152 | 171 | 190 | 209 | 147 | 165 | 184 | 202 | 134 | 151 | 168 | 184 |
| | *AH6A076 | 151 | 170 | 189 | 208 | 146 | 164 | 183 | 201 | 133 | 150 | 167 | 184 |
| | *AH6A108 | 229 | 266 | 303 | 341 | 221 | 257 | 293 | 329 | 202 | 235 | 268 | 301 |
| | *AH6A130 | 282 | 319 | 356 | 394 | 273 | 309 | 345 | 381 | 249 | 282 | 315 | 347 |
| | *AH6A162 | 306 | 343 | 381 | 418 | 296 | 332 | 368 | 404 | 270 | 303 | 336 | 369 |
| | *AH6A193 | 385 | 422 | 460 | 497 | 373 | 409 | 445 | 481 | 340 | 373 | 406 | 439 |
| | *AH6A215 | 384 | 421 | 459 | 496 | 372 | 408 | 444 | 480 | 339 | 372 | 405 | 438 |
| | *AH6A263 | 513 | 573 | 633 | 694 | 496 | 555 | 614 | 672 | 453 | 506 | 560 | 613 |
| **MT ELECTRIC DEFROST** | | | | | | | | | | | | | |
| 6 FPI | *AH6D037 | 87 | 99 | 110 | 122 | 84 | 96 | 107 | 118 | 77 | 87 | 98 | 108 |
| | *AH6D052 | 123 | 142 | 160 | 178 | 119 | 137 | 155 | 173 | 109 | 125 | 141 | 157 |
| | *AH6D063 | 152 | 171 | 190 | 209 | 147 | 165 | 184 | 202 | 134 | 151 | 168 | 184 |
| | *AH6D077 | 151 | 170 | 189 | 208 | 146 | 164 | 183 | 201 | 133 | 150 | 167 | 184 |
| | *AH6D107 | 229 | 266 | 303 | 341 | 221 | 257 | 293 | 329 | 202 | 235 | 268 | 301 |
| | *AH6D129 | 282 | 319 | 356 | 394 | 273 | 309 | 345 | 381 | 249 | 282 | 315 | 347 |
| | *AH6D161 | 306 | 343 | 381 | 418 | 296 | 332 | 368 | 404 | 270 | 303 | 336 | 369 |
| | *AH6D192 | 385 | 422 | 460 | 497 | 373 | 409 | 445 | 481 | 340 | 373 | 406 | 439 |
| | *AH6D214 | 384 | 421 | 459 | 496 | 372 | 408 | 444 | 480 | 339 | 372 | 405 | 438 |
| | *AH6D262 | 513 | 573 | 633 | 694 | 496 | 555 | 614 | 672 | 453 | 506 | 560 | 613 |
| **LT ELECTRIC DEFROST** | | | | | | | | | | | | | |
| 6 FPI | *AH6E040 | 95 | 108 | 120 | 133 | 92 | 104 | 116 | 128 | 84 | 95 | 106 | 117 |
| | *AH6E053 | 128 | 146 | 165 | 184 | 124 | 142 | 160 | 178 | 113 | 129 | 146 | 162 |
| | *AH6E065 | 153 | 172 | 191 | 209 | 149 | 167 | 185 | 203 | 136 | 152 | 169 | 185 |
| | *AH6E080 | 168 | 203 | 238 | 274 | 163 | 197 | 232 | 266 | 149 | 180 | 211 | 242 |
| | *AH6E106 | 236 | 274 | 311 | 349 | 229 | 265 | 302 | 338 | 209 | 242 | 275 | 308 |
| | *AH6E131 | 286 | 324 | 361 | 399 | 278 | 314 | 350 | 386 | 253 | 286 | 319 | 352 |
| | *AH6E160 | 311 | 348 | 386 | 423 | 302 | 338 | 374 | 410 | 275 | 308 | 341 | 374 |
| | *AH6E188 | 409 | 470 | 530 | 591 | 398 | 456 | 515 | 574 | 362 | 416 | 470 | 523 |
| | *AH6E237 | 507 | 568 | 628 | 689 | 493 | 552 | 610 | 669 | 449 | 502 | 556 | 610 |
| 4 FPI | *AH4E043 | 128 | 146 | 165 | 184 | 124 | 141 | 160 | 178 | 113 | 129 | 146 | 162 |
| | *AH4E053 | 153 | 172 | 191 | 209 | 149 | 166 | 185 | 203 | 136 | 152 | 169 | 185 |
| | *AH4E086 | 218 | 253 | 288 | 324 | 212 | 245 | 280 | 314 | 193 | 224 | 255 | 286 |
| | *AH4E105 | 286 | 324 | 361 | 399 | 278 | 313 | 350 | 386 | 253 | 286 | 319 | 352 |
| | *AH4E128 | 311 | 348 | 386 | 423 | 302 | 337 | 374 | 410 | 275 | 308 | 341 | 374 |
| | *AH4E158 | 386 | 424 | 461 | 499 | 375 | 411 | 447 | 484 | 342 | 375 | 408 | 441 |
| | *AH4E198 | 507 | 568 | 628 | 689 | 493 | 551 | 610 | 669 | 449 | 502 | 556 | 610 |

**WAREHOUSE UNIT COOLERS -** Maximum Releasable Charge ($m_{rel}$) - lb

| Generic Model | | R454A | | | | R454C | | | | R455A | | | |
|---|---|---|---|---|---|---|---|---|---|---|---|---|---|
| | | 10' | 20' | 30' | 40' | 10' | 20' | 30' | 40' | 10' | 20' | 30' | 40' |
| **AIR DEFROST** | | | | | | | | | | | | | |
| 6 FPI | *AW6A042 | 5.4 | 6.2 | 6.9 | 7.6 | 5.5 | 6.2 | 7.0 | 7.7 | 5.5 | 6.2 | 6.9 | 7.7 |
| | *AW6A057 | 7.7 | 8.8 | 10.0 | 11.1 | 7.8 | 8.9 | 10.1 | 11.3 | 7.7 | 8.9 | 10.1 | 11.2 |
| | *AW6A072 | 9.5 | 10.7 | 11.9 | 13.1 | 9.6 | 10.8 | 12.0 | 13.2 | 9.5 | 10.7 | 11.9 | 13.1 |
| | *AW6A084 | 9.4 | 10.6 | 11.8 | 13.0 | 9.5 | 10.7 | 12.0 | 13.2 | 9.5 | 10.7 | 11.9 | 13.1 |
| | *AW6A116 | 14.3 | 16.6 | 19.0 | 21.3 | 14.5 | 16.9 | 19.2 | 21.6 | 14.4 | 16.7 | 19.1 | 21.4 |
| | *AW6A143 | 17.6 | 20.0 | 22.3 | 24.6 | 17.8 | 20.2 | 22.6 | 24.9 | 17.7 | 20.1 | 22.4 | 24.8 |
| | *AW6A173 | 19.1 | 21.5 | 23.8 | 26.1 | 19.4 | 21.8 | 24.1 | 26.5 | 19.3 | 21.6 | 24.0 | 26.3 |
| | *AW6A216 | 24.1 | 26.4 | 28.8 | 31.1 | 24.4 | 26.8 | 29.1 | 31.5 | 24.3 | 26.6 | 28.9 | 31.3 |
| | *AW6A235 | 24.0 | 26.4 | 28.7 | 31.0 | 24.3 | 26.7 | 29.1 | 31.4 | 24.2 | 26.5 | 28.9 | 31.2 |
| | *AW6A291 | 32.1 | 35.9 | 39.6 | 43.4 | 32.5 | 36.4 | 40.2 | 44.1 | 32.3 | 36.1 | 39.9 | 43.8 |
| **MT ELECTRIC DEFROST** | | | | | | | | | | | | | |
| 6 FPI | *AW6D042 | 5.4 | 6.2 | 6.9 | 7.6 | 5.5 | 6.2 | 7.0 | 7.7 | 5.5 | 6.2 | 6.9 | 7.7 |
| | *AW6D057 | 7.7 | 8.8 | 10.0 | 11.1 | 7.8 | 8.9 | 10.1 | 11.3 | 7.7 | 8.9 | 10.1 | 11.2 |
| | *AW6D072 | 9.5 | 10.7 | 11.9 | 13.1 | 9.6 | 10.8 | 12.0 | 13.2 | 9.5 | 10.7 | 11.9 | 13.1 |
| | *AW6D084 | 9.4 | 10.6 | 11.8 | 13.0 | 9.5 | 10.7 | 12.0 | 13.2 | 9.5 | 10.7 | 11.9 | 13.1 |
| | *AW6D116 | 14.3 | 16.6 | 19.0 | 21.3 | 14.5 | 16.9 | 19.2 | 21.6 | 14.4 | 16.7 | 19.1 | 21.4 |
| | *AW6D144 | 17.6 | 20.0 | 22.3 | 24.6 | 17.8 | 20.2 | 22.6 | 24.9 | 17.7 | 20.1 | 22.4 | 24.8 |
| | *AW6D174 | 19.1 | 21.5 | 23.8 | 26.1 | 19.4 | 21.8 | 24.1 | 26.5 | 19.3 | 21.6 | 24.0 | 26.3 |
| | *AW6D216 | 24.1 | 26.4 | 28.8 | 31.1 | 24.4 | 26.8 | 29.1 | 31.5 | 24.3 | 26.6 | 28.9 | 31.3 |
| | *AW6D235 | 24.0 | 26.4 | 28.7 | 31.0 | 24.3 | 26.7 | 29.1 | 31.4 | 24.2 | 26.5 | 28.9 | 31.2 |
| | *AW6D292 | 32.1 | 35.9 | 39.6 | 43.4 | 32.5 | 36.4 | 40.2 | 44.1 | 32.3 | 36.1 | 39.9 | 43.8 |
| **LT ELECTRIC DEFROST** | | | | | | | | | | | | | |
| 6 FPI | *AW6E044 | 5.9 | 6.7 | 7.5 | 8.3 | 6.0 | 6.8 | 7.6 | 8.4 | 6.0 | 6.8 | 7.6 | 8.3 |
| | *AW6E057 | 8.0 | 9.1 | 10.3 | 11.5 | 8.1 | 9.3 | 10.5 | 11.6 | 8.0 | 9.2 | 10.4 | 11.6 |
| | *AW6E071 | 9.6 | 10.7 | 11.9 | 13.1 | 9.7 | 10.9 | 12.1 | 13.3 | 9.7 | 10.8 | 12.0 | 13.2 |
| | *AW6E087 | 10.5 | 12.7 | 14.9 | 17.1 | 10.7 | 12.9 | 15.2 | 17.4 | 10.6 | 12.8 | 15.0 | 17.3 |
| | *AW6E114 | 14.8 | 17.1 | 19.5 | 21.8 | 15.0 | 17.4 | 19.7 | 22.1 | 14.9 | 17.2 | 19.6 | 22.0 |
| | *AW6E142 | 17.9 | 20.2 | 22.6 | 24.9 | 18.2 | 20.6 | 22.9 | 25.3 | 18.0 | 20.4 | 22.8 | 25.1 |
| | *AW6E170 | 19.4 | 21.8 | 24.1 | 26.5 | 19.8 | 22.1 | 24.5 | 26.9 | 19.6 | 22.0 | 24.3 | 26.7 |
| | *AW6E215 | 25.6 | 29.4 | 33.2 | 37.0 | 26.1 | 29.9 | 33.8 | 37.6 | 25.8 | 29.7 | 33.5 | 37.3 |
| | *AW6E256 | 31.7 | 35.5 | 39.3 | 43.1 | 32.3 | 36.1 | 40.0 | 43.9 | 32.0 | 35.9 | 39.7 | 43.5 |
| 4 FPI | *AW4E045 | 8.0 | 9.1 | 10.3 | 11.5 | 8.1 | 9.3 | 10.5 | 11.6 | 8.0 | 9.2 | 10.4 | 11.6 |
| | *AW4E058 | 9.6 | 10.7 | 11.9 | 13.1 | 9.7 | 10.9 | 12.1 | 13.3 | 9.7 | 10.8 | 12.0 | 13.2 |
| | *AW4E092 | 13.6 | 15.8 | 18.0 | 20.2 | 13.9 | 16.1 | 18.3 | 20.6 | 13.8 | 16.0 | 18.2 | 20.4 |
| | *AW4E116 | 17.9 | 20.2 | 22.6 | 24.9 | 18.2 | 20.6 | 22.9 | 25.3 | 18.0 | 20.4 | 22.8 | 25.1 |
| | *AW4E136 | 19.4 | 21.8 | 24.1 | 26.5 | 19.8 | 22.1 | 24.5 | 26.9 | 19.6 | 22.0 | 24.3 | 26.7 |
| | *AW4E173 | 24.2 | 26.5 | 28.8 | 31.2 | 24.6 | 26.9 | 29.3 | 31.7 | 24.4 | 26.7 | 29.1 | 31.5 |
| | *AW4E214 | 31.7 | 35.5 | 39.3 | 43.1 | 32.3 | 36.1 | 40.0 | 43.9 | 32.0 | 35.9 | 39.7 | 43.5 |

**WAREHOUSE UNIT COOLERS -** Minimum Room Area ($A_{min}$) - sq. ft

| Generic Model | | R454A | | | | R454C | | | | R455A | | | |
|---|---|---|---|---|---|---|---|---|---|---|---|---|---|
| | | 10' | 20' | 30' | 40' | 10' | 20' | 30' | 40' | 10' | 20' | 30' | 40' |
| **AIR DEFROST** | | | | | | | | | | | | | |
| 6 FPI | *AW6A042 | 87 | 99 | 110 | 122 | 84 | 96 | 107 | 118 | 77 | 87 | 98 | 108 |
| | *AW6A057 | 123 | 142 | 160 | 178 | 119 | 137 | 155 | 173 | 109 | 125 | 141 | 157 |
| | *AW6A072 | 152 | 171 | 190 | 209 | 147 | 165 | 184 | 202 | 134 | 151 | 168 | 184 |
| | *AW6A084 | 151 | 170 | 189 | 208 | 146 | 164 | 183 | 201 | 133 | 150 | 167 | 184 |
| | *AW6A116 | 229 | 266 | 303 | 341 | 221 | 257 | 293 | 329 | 202 | 235 | 268 | 301 |
| | *AW6A143 | 282 | 319 | 356 | 394 | 273 | 309 | 345 | 381 | 249 | 282 | 315 | 347 |
| | *AW6A173 | 306 | 343 | 381 | 418 | 296 | 332 | 368 | 404 | 270 | 303 | 336 | 369 |
| | *AW6A216 | 385 | 422 | 460 | 497 | 373 | 409 | 445 | 481 | 340 | 373 | 406 | 439 |
| | *AW6A235 | 384 | 421 | 459 | 496 | 372 | 408 | 444 | 480 | 339 | 372 | 405 | 438 |
| | *AW6A291 | 513 | 573 | 633 | 694 | 496 | 555 | 614 | 672 | 453 | 506 | 560 | 613 |
| **MT ELECTRIC DEFROST** | | | | | | | | | | | | | |
| 6 FPI | *AW6D042 | 87 | 99 | 110 | 122 | 84 | 96 | 107 | 118 | 77 | 87 | 98 | 108 |
| | *AW6D057 | 123 | 142 | 160 | 178 | 119 | 137 | 155 | 173 | 109 | 125 | 141 | 157 |
| | *AW6D072 | 152 | 171 | 190 | 209 | 147 | 165 | 184 | 202 | 134 | 151 | 168 | 184 |
| | *AW6D084 | 151 | 170 | 189 | 208 | 146 | 164 | 183 | 201 | 133 | 150 | 167 | 184 |
| | *AW6D116 | 229 | 266 | 303 | 341 | 221 | 257 | 293 | 329 | 202 | 235 | 268 | 301 |
| | *AW6D144 | 282 | 319 | 356 | 394 | 273 | 309 | 345 | 381 | 249 | 282 | 315 | 347 |
| | *AW6D174 | 306 | 343 | 381 | 418 | 296 | 332 | 368 | 404 | 270 | 303 | 336 | 369 |
| | *AW6D216 | 385 | 422 | 460 | 497 | 373 | 409 | 445 | 481 | 340 | 373 | 406 | 439 |
| | *AW6D235 | 384 | 421 | 459 | 496 | 372 | 408 | 444 | 480 | 339 | 372 | 405 | 438 |
| | *AW6D292 | 513 | 573 | 633 | 694 | 496 | 555 | 614 | 672 | 453 | 506 | 560 | 613 |
| **LT ELECTRIC DEFROST** | | | | | | | | | | | | | |
| 6 FPI | *AW6E044 | 95 | 108 | 120 | 133 | 92 | 104 | 116 | 128 | 84 | 95 | 106 | 117 |
| | *AW6E057 | 128 | 146 | 165 | 184 | 124 | 142 | 160 | 178 | 113 | 129 | 146 | 162 |
| | *AW6E071 | 153 | 172 | 191 | 209 | 149 | 167 | 185 | 203 | 136 | 152 | 169 | 185 |
| | *AW6E087 | 168 | 203 | 238 | 274 | 163 | 197 | 232 | 266 | 149 | 180 | 211 | 242 |
| | *AW6E114 | 236 | 274 | 311 | 349 | 229 | 265 | 302 | 338 | 209 | 242 | 275 | 308 |
| | *AW6E142 | 286 | 324 | 361 | 399 | 278 | 314 | 350 | 386 | 253 | 286 | 319 | 352 |
| | *AW6E170 | 311 | 348 | 386 | 423 | 302 | 338 | 374 | 410 | 275 | 308 | 341 | 374 |
| | *AW6E215 | 409 | 470 | 530 | 591 | 398 | 456 | 515 | 574 | 362 | 416 | 470 | 523 |
| | *AW6E256 | 507 | 568 | 628 | 689 | 493 | 552 | 610 | 669 | 449 | 502 | 556 | 610 |
| 4 FPI | *AW4E045 | 128 | 146 | 165 | 184 | 124 | 141 | 160 | 178 | 113 | 129 | 146 | 162 |
| | *AW4E058 | 153 | 172 | 191 | 209 | 149 | 166 | 185 | 203 | 136 | 152 | 169 | 185 |
| | *AW4E092 | 218 | 253 | 288 | 324 | 212 | 245 | 280 | 314 | 193 | 224 | 255 | 286 |
| | *AW4E116 | 286 | 324 | 361 | 399 | 278 | 313 | 350 | 386 | 253 | 286 | 319 | 352 |
| | *AW4E136 | 311 | 348 | 386 | 423 | 302 | 337 | 374 | 410 | 275 | 308 | 341 | 374 |
| | *AW4E173 | 386 | 424 | 461 | 499 | 375 | 411 | 447 | 484 | 342 | 375 | 408 | 441 |
| | *AW4E214 | 507 | 568 | 628 | 689 | 493 | 551 | 610 | 669 | 449 | 502 | 556 | 610 |

# LOCATING AND MOUNTING CONDENSING UNITS

Condensing units (CU's) must be located where there is an unrestricted supply of clean, fresh air.

Areas with corrosive vapors or materials should be avoided, as should areas with polluted air. Do not locate units where air discharge from one will enter into the air intake of others. Avoid locating units in restricted spaces where heat will build up and can enter the condenser.

Condensing units with horizontal airflow should be positioned so that the direction of airflow through the condenser is the same as the prevailing wind. Make sure there is room around the unit for regular inspection and service. Mount all condensing units level.

Roof mounted condensing units must have adequate support for their operating weight plus a safety factor. They should be mounted above supporting walls, over hallways, storage areas, or auxiliary areas that are not sensitive to noise or vibration. Mount them where sound levels are not an important factor.

Pad mounted condensing units should be mounted on smooth and level pads a minimum of 4 inches above ground level. They should be mounted away from windows, doors, and other areas sensitive to noise. The area surrounding a pad mounted unit preferably will be concrete, asphalt, or other smooth, hard, clean level surface. This will keep the condenser coil clean from grass, dirt, and weed clippings. A security fence also helps to keep leaves and other debris out of the coil. Protecting the condensing unit also protects the product stored in the cooler or freezer!

Condensing units, piping and disconnects should not be accessible to unauthorized persons. To protect the equipment from tampering and vandalism and protect people from accidental injury, a security fence with locked access is highly recommended. Condensing units accessible to the general public often receive damage to the coil, piping, fans, or other components. Protect your equipment, your products in storage, and protect yourself from liability. Prevent accidents and loss.

Condensing units must be mounted to pads or structural rails with adequate size bolts to prevent the unit from shifting or changing position. Mounting holes are provided for proper size fasteners. Iso-pads are recommended to absorb vibration and reduce noise. Seismic isolator may be required in some localities. Follow the isolator manufacturers recommendation when selecting and applying isolators. Mount units level.

Condensing units with spring mounted compressors are shipped with blocks or retainers under the compressor feet to keep it from shaking during shipment. Remove the blocks or retainers. Do not tighten mounting nuts tight against the rubber spacer or foot. Units with iso-pad mounted compressors are shipped with the mounting nuts tight and they should be checked to be sure they have not loosened in shipment.

Observe minimum clearances commendations below. Do not locate any unit to be bordered by tall walls or obstructions on three or more sides, even when the clearance are observed. The minimum space between units is 2 x dimensions shown.

Table 1

| CONDENSING UNIT DESCRIPTION | | MINIMUM DIMENSION (INCHES)^ | | |
|---|---|---|---|---|
| | | A | B | C |
| SMALL CU'S | 1/2 THRU 2 HP | 60 | 24 | 36 |
| | 3 THRU 6 HP | 72 | 24 | 36 |
| MEDIUM CU'S* | 3 THRU 22 HP | 72 | 30 | 48 |
| LARGE CU'S** | 15 THRU 100 HP | 48 | 48 | 48 |

* Horizontal air discharge ** Vertical air discharge
^ Always observe NEC electrical clearances

Drawing 1

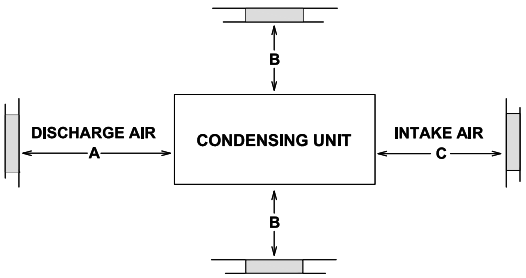

# QV SERIES CONDENSING UNITS RIGGING DATA

| Base Model | Fans Long | Est. Shipping Weight (lbs.) |
|---|---|---|
| **Single** | | |
| ***V015M4* | 2 | 1875 |
| ***V020M4* | 2 | 1940 |
| ***V025M4* | 2 | 1940 |
| ***V030M4* | 2 | 1940 |
| ***V035M4S | 2 | 2440 |
| ***V040M4* | 2 | 2440 |
| ***V050M4* | 2 | 2540 |
| ***V0022L4* | 2 | 1940 |
| ***V0027L4* | 2 | 2040 |
| ***V0030L4* | 2 | 2040 |
| ***V0040L4* | 2 | 2040 |
| **Dual** | | |
| ***D030M4* | 2 | 3660 |
| ***D040M4* | 2 | 3780 |
| ***D050M4* | 2 | 3780 |
| ***D060M4* | 2 | 3780 |
| ***D070M4* | 2 | 4760 |
| ***D080M4* | 3 | 4760 |
| ***D100M4* | 3 | 4950 |
| ***D044L4* | 2 | 3780 |
| ***D054L4* | 2 | 3980 |
| ***D060L4* | 2 | 3980 |
| ***D080L4* | 2 | 3980 |
| **Parallel** | | |
| ***P50M4* | 2 | 3720 |
| ***P60M4* | 2 | 3720 |
| ***P70M4* | 3 | 4680 |
| ***P80M4* | 3 | 4680 |
| ***P100M4* | 3 | 4880 |
| ***P044L4* | 2 | 3720 |
| ***P054L4* | 2 | 3920 |
| ***P060L4* | 2 | 3920 |
| ***P080L4* | 2 | 3920 |

***Space Holder for Brand, Compressor, and Flood Type.  Match remaining characters for unit Weight.

# QV SERIES CONDENSING UNITS RIGGING DATA

Drawing 2

1 Fan Length Models

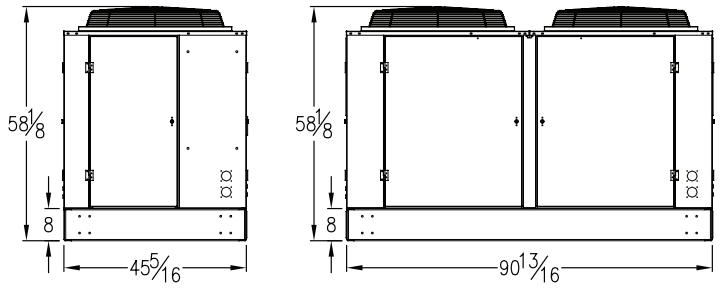


2 Fan Length Models

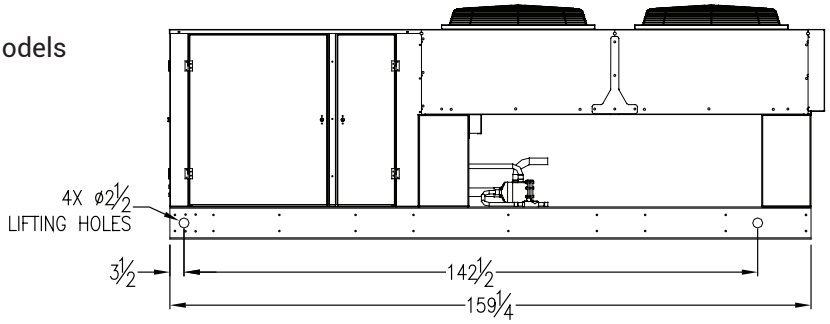


3 Fan Length Models

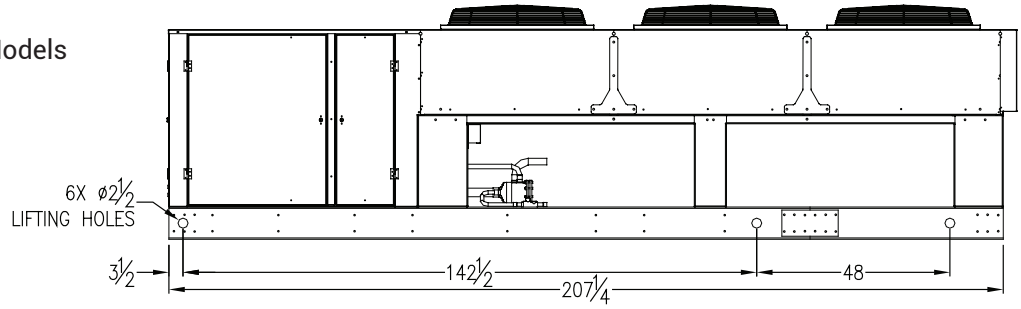

# LOCATING WALK-IN EVAPORATORS

Minimum dimension for good air circulation and evaporator performance

| Evaporator Height (Key Dim.) | Unit to Back Wall * | Unit to Side Wall | Unit to Unit | Unit to Front Wall | Unit to Floor |
|---|---|---|---|---|---|
| *H* | *1 x H* | *1 x H* | *2 x H* | *5 x H* | *3 x H* |
| 12" | 12" | 12" | 24" | 60" | 60" † |
| 15" | 15" | 15" | 30" | 75" | 60" † |
| 18" | 18" | 18" | 36" | 90" | 60" † |
| 24" | 24" | 24" | 48" | 120" | 72" |
| 30" | 30" | 30" | 60" | 150" | 90" |
| 36" | 36" | 36" | 72" | 180" | 108" |
| 42" | 42" | 42" | 84" | 210" | 126" |
| 48" | 48" | 48" | 96" | 240" | 144" |
| 48" | 48" | 48" | 96" | 240" | 144" |

* Critical Minimum Dimension  H = Height of Evaporator  † - Minimum walk-in height of 7'-0"

Drawing 3

Side View

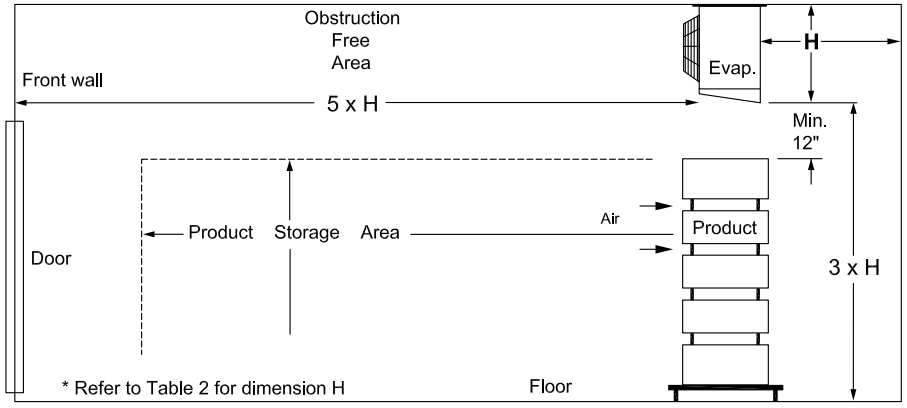


Top View

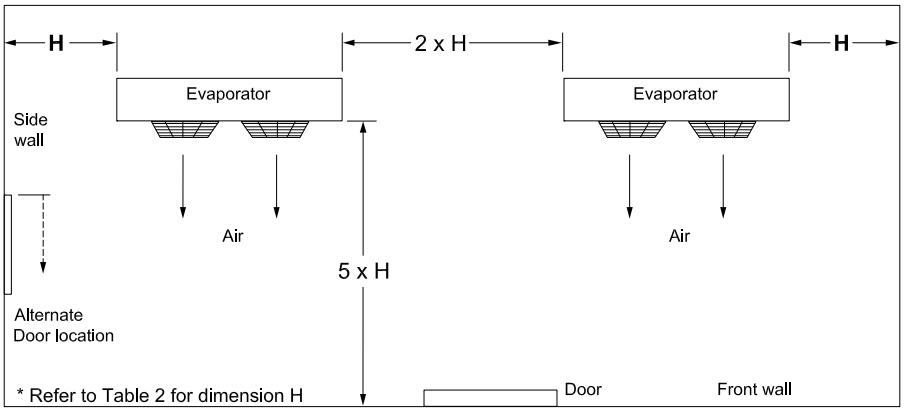


Drawings are not to scale.

# LOCATING AND MOUNTING WALK-IN EVAPORATORS

Locate evaporators for the air pattern to cover all of the room. Do not restrict the inlet or outlet air stream. Avoid placing evaporators above or close to doors. Direct the air stream toward the door when possible or arrange to blow down an aisle. Allow sufficient clearance for air circulation and servicing the unit. The ceiling structure must have adequate strength to support all mechanical equipment, components, piping, and personnel.

Heavy Zinc plated or stainless steel bolts should be used to mount evaporators. We recommend a minimum 5/16" diameter for Low Profile, Low Velocity and Center Mount units. A minimum 3/8" diameter should be used with Medium Profile, Heavy Duty and Warehouse units. Use flat washers next to hanger bars and tighten all fasteners securely. Hang all unit coolers level to insure positive condensate draining. All drain lines must be trapped.

**Drawing 4**

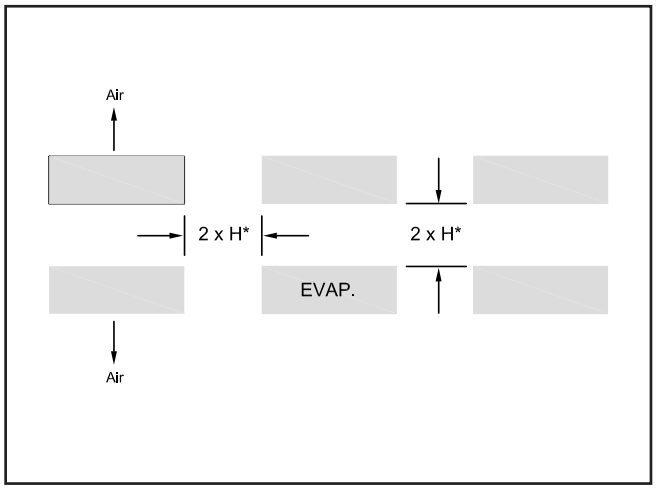


**Drawing 5**

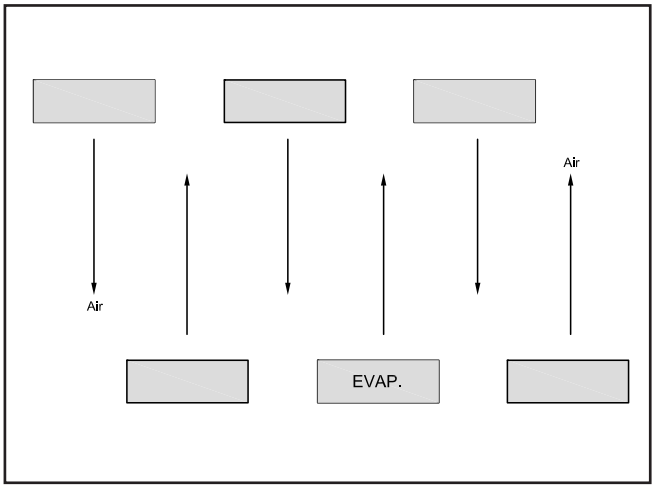


TOP VIEW - Large coolers or freezers where one wall will not accommodate all evaporators or desired air throw is excessive.

**Drawing 6**

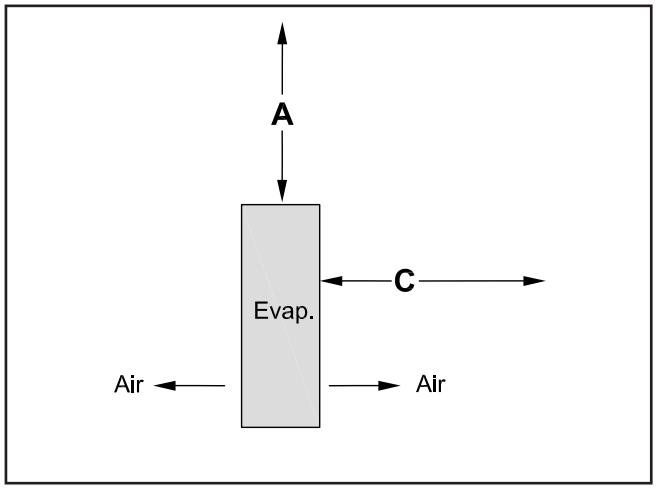


TOP VIEW - Single Center mount Unit

**Drawing 7**

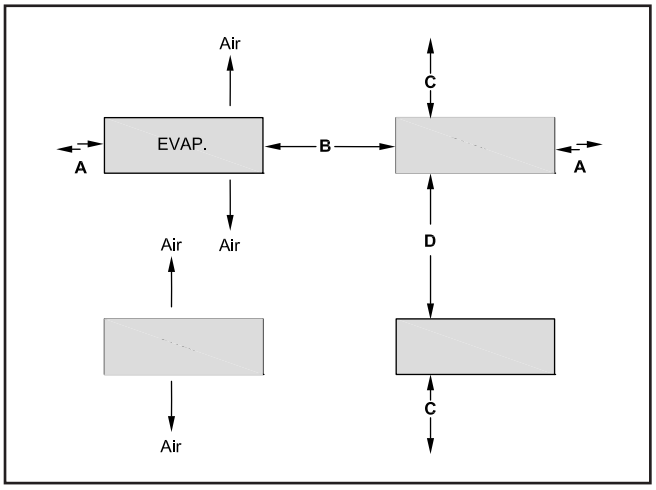


TOP VIEW - Multiple Center mount Unit

| Recommended Spacing for Low Profile Evaporators | | | | | | | |
|---|---|---|---|---|---|---|---|
| A | | B | | C | | D | |
| Min. | Max. | Min. | Max. | Min. | Max. | Min. | Max. |
| 1' | 8' | 2' | 16' | 3' | 12' | 8' | 24' |

Dimensions are in feet. One foot minimum between bottom of unit and top of product.

# GENERAL INSTALLATION INFORMATION

Equipment shall be installed in accordance with the Safety Standard for Refrigeration Systems, ANSI/ASHRAE 15

- In order to reduce flammability hazards the installation of this appliance must only be carried out by a suitably qualified person.
- Keep clear of obstruction all ventilation openings in the appliance enclosure.
- Do not use electrical appliances inside the food/ice storage compartments unless they are of the type recommended by the manufacturer.
- Do not damage the refrigerating circuit.
- Component parts shall be replaced with like components so as to minimize the risk of possible ignition due to incorrect parts.
- This equipment shall not be installed in public corridors or lobbies.
- Outdoor equipment must be located a minimum of 20' from building opening(s)

# FIELD PIPING & LABELING REQUIREMENTS

**General Installation Guidelines**

- Minimize pipe length and complexity wherever possible.
- Account for pipe length effects on refrigerant charge during system design.
- Use only clean, dry, capped ACR-grade copper tubing. If Type L tubing is used, it must be thoroughly cleaned internally. Do not leave piping or components open to atmosphere longer than necessary.
- Support all piping to prevent vibration, stress, and joint failure.
- Use gasketed tube clamps to prevent abrasion.
- Secure liquid lines near solenoids, expansion valves, and distributors.
- Protect piping at wall and ceiling penetrations.
- Seal piping chases and penetrations to prevent air infiltration.
- Eliminate air leaks to avoid performance loss, structural damage, and safety hazards.
- Piping must be protected from physical damage during operation and service. Ensure piping connections remain accessible for maintenance.
- Piping must have all field joints accessible for inspection prior to enclosure.
- All piping materials and installations must comply with applicable codes, such as:
  - ANSI/ASHRAE 15
  - Uniform Mechanical Code (IAPMO)
  - International Mechanical Code (ICC)
  - CSA B52

**Flammable (A2L) Refrigerant Safety**

- Do not install piping for flammable refrigerants in unventilated spaces smaller than the minimum allowable volume (Amin).
- Exposed piping or insulation must be labeled:
  - "A2L WARNING – Risk of Fire. Flammable Refrigerant."
  - Lettering ≥ ½ inch tall, repeated every 20 feet.
- Install an additional warning label near or on exposed piping stating:
  - "CAUTION – Risk of Fire or Explosion Due To Puncture of Refrigerant Tubing; Follow Handling Instructions Carefully. Flammable Refrigerant Used."
- For A2L water-cooled condensing units, the receiver fusible plug or pressure relief valve must be piped to vent outdoors.

# FIELD PIPING & LABELING REQUIREMENTS

**Thermal, Mechanical, and Environmental Considerations**

- Allow for thermal expansion and contraction in long piping runs.
- Protect steel piping and components with corrosion-resistant coatings before insulating.
- Flexible piping elements must:
  - Be protected from mechanical damage and torsional stress.
  - Be inspected annually for signs of wear or damage.
- Design piping to minimize vibration, pulsation, and hydraulic shock.
- Protect piping from water accumulation and freezing (especially relief piping) as well as dirt, debris, and accidental damage in occupied spaces.
- Secure and guard indoor piping against damage from activities such as furniture movement or renovations.

**Brazing**

- Always flow dry nitrogen during brazing to prevent oxide and scale formation.
- Use a suitable silver alloy solder for suction and liquid lines.
- Use only wrought copper fittings.
- Use long-radius elbows wherever possible.
- Protect valves during brazing using wet rags or heat absorbing paste—disassembly is not required.

**Suction Line Selection & Installation**

- Size suction lines to ensure:
  - Adequate refrigerant velocity for oil return
  - Low enough pressure drop to avoid capacity loss
  - Total suction pressure drop must not exceed 2°F equivalent saturated temperature loss.
- Suction line risers:
  - Must include oil traps at the base and at 15-foot intervals up the riser
  - Should be the same size as the vertical riser connected to its outlet
  - Must not be larger in diameter than horizontal runs.
  - Use Double Risers where appropriate
- Horizontal suction lines must slope 1 inch per 10 feet in the direction of flow.
- Install a ¼" male flare Schrader fitting at the evaporator outlet for accurate pressure and superheat measurement.
- Insulate all suction lines to prevent capacity loss and high discharge temperatures.

**Liquid Line Selection & Installation**

- Liquid lines are typically the same size for horizontal and vertical runs.
- Vertical upward flow liquid lines experience pressure loss similar to that in water line riser due to lift. Subcooling may be used to offset pressure loss, but must not replace proper liquid line sizing.
  - Acceptable subcooling methods:
    - Join the liquid and suction line together and then insulate them
    - Manufactured liquid–suction heat exchanger
    - Integral condenser subcooling circuit, included on most HTPG Air Cooled Condensing Units
  - Liquid lines with >30 ft vertical lift require special design consideration.

# FIELD PIPING & LABELING REQUIREMENTS

- Undersized or improperly designed liquid lines can cause flash gas and poor system performance while oversized liquid lines increase refrigerant charge unnecessarily.
- Install liquid line solenoids for A1 systems near the expansion valve or at the first evaporator branch. A2L systems should observe solenoid recommendations in the A2L Piping Schemes section.
- Install a ¼" male flare Schrader fitting at the evaporator inlet prior to the expansion device for accurate pressure and subcooling measurement.
- Liquid lines ran inside the refrigerated space should be insulated with a minimum ½" wall pipe insulation to prevent undesired subcooling. Consider minimum ¾" wall for room temps below 30°F

**Expansion Valve Installation**

- Before installing an expansion valve:
  - Make selection based on system capacity and manufacturer ratings and use the appropriate capacity multiplier if liquid is subcooled below 70° F.
  - Verify if the distributor has a nozzle installed or is venturi type before expansion valve installation.
  - Use balanced-port expansion valves when subcooling varies.
- When installing expansion valve:
  - Install outlet directly to distributor when possible—avoid elbows and excessive adapters
  - Secure sensing bulbs at the evaporator outlet, on the side of a horizontal run of suction line, at the 4 o'clock or 8 o'clock position, before any traps.
    - The sensing bulbs must be in uniform contact with clean copper tube and must not bridge any fitting or uneven surface.
    - DO NOT OVERTIGHTEN BULB CLAMPS OR DEFORM THE BULB IN ANY WAY.
  - A thermal mastic or heat transfer compound may be used with the expansion valve bulb and suction line for quicker expansion valve response.

**Drain Line Installation**

- Drain lines must be at least the size of the evaporator drain connection and should of copper or metal material if the room temperature is below 35F.
- Slope drain lines ¼ inch per foot.
- All drains must be trapped, outside the refrigerated space if possible, and routed to an open drain. Never connect directly to sewer lines or drain onto floors/walkways.
- Protect drain lines and traps from freezing using insulation and heat trace as required.

**Additional Considerations**

- When operating at evaporator temperatures of -20° F and lower, oil separators should be considered to minimize the amount of oil in circulation.
- Avoid excessive refrigerant charge—reasonable pressure drop is preferable to oversized piping.
  - Suction accumulators are strongly recommended when flood back is likely or the refrigerant charge is large.

# SUCTION LINE DESIGN

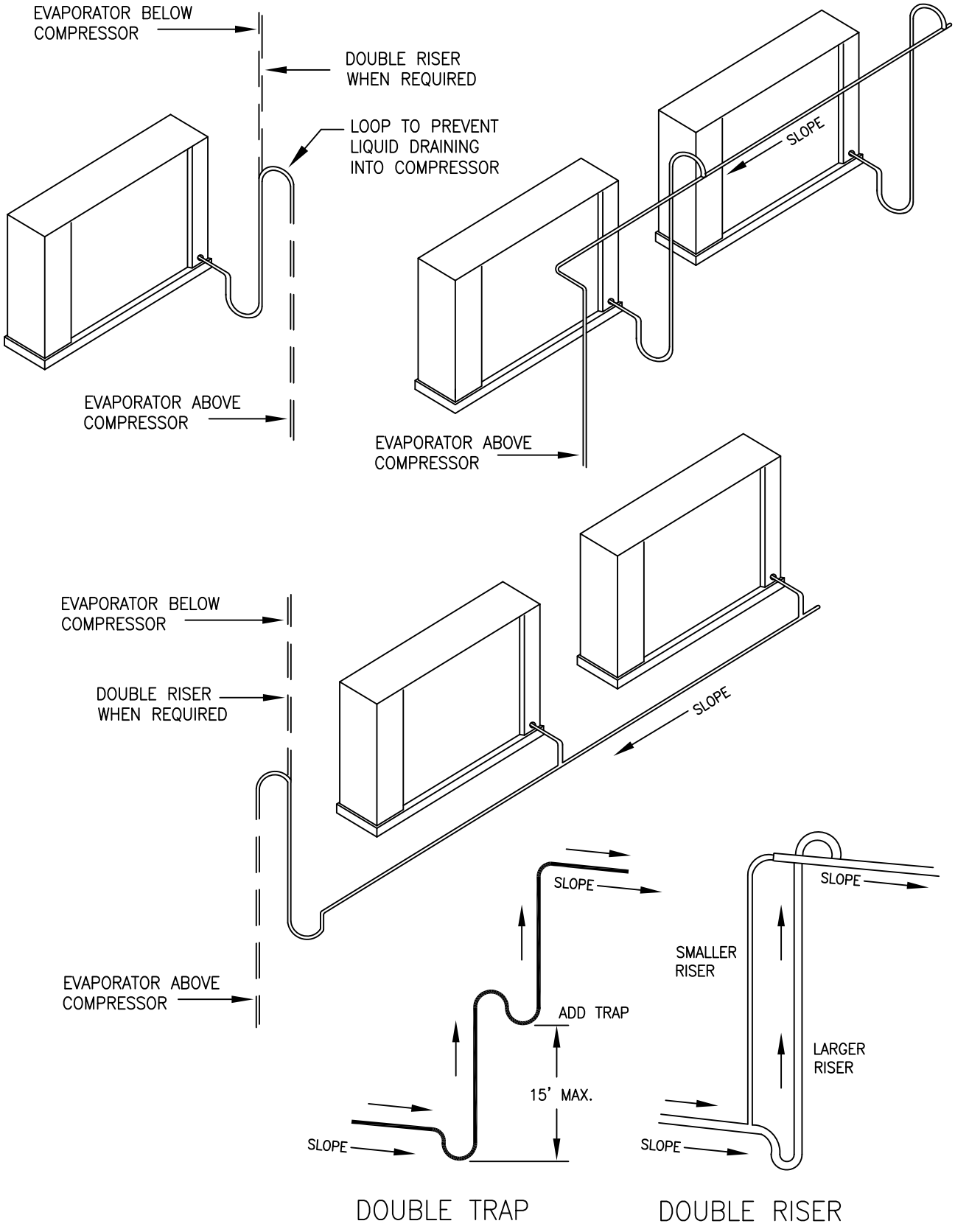

# A2L PIPING SCHEMES

HTPG's matched systems should be piped to use one solenoid valve to serve as both the liquid line solenoid valve and the liquid isolation valve. For air and electric defrost equipped unit coolers the suction isolation valve should be a check valve rather than a solenoid. During a leak, the liquid valve and suction check valve isolate the unit cooler and piping inside the refrigerated space. The compressor will evacuate the isolated section of piping through the suction check valve. This scheme yields less parts for the installation, ensures that the liquid valve is exercised regularly, and allows for a pump down during a leak event. If these valves are to be provided.

The installer must position the isolation valves outside of the refrigerated space. We recommend mounting the valves close to the box exterior help keep $m_{rel}$ as low as possible.

**Figure 1: Simple Matched System**

This configuration illustrates a basic matched system with one unit cooler and one condensing unit.

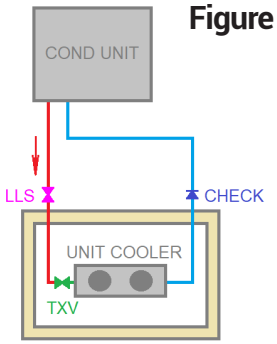


**Figure 2: Multiple Unit Coolers with Shared Isolation Valves**

This configuration shows a matched system with multiple unit coolers connected to a single condensing unit.

Shared isolation valves are used across all unit coolers. In the event of a leak, the isolation solenoid closes, and the system initiates pump down.

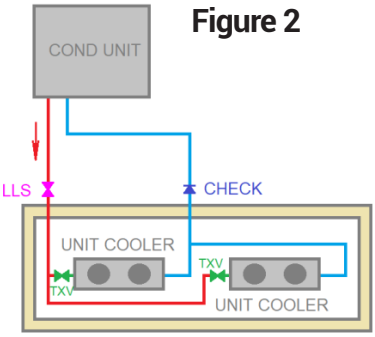


**Figure 3: Multiple Unit Coolers with Individual Isolation Valves**

This configuration features multiple unit coolers, each equipped with its own set of isolation valves.

The Maximum Refrigerant Emission Limit ($m_{rel}$) is calculated based on the largest isolated circuit, not the total system charge.

This approach may reduce the required room size (Amin) and potentially eliminate the need for mechanical ventilation.

The system is wired so that a leak triggers all isolation solenoids to close simultaneously, followed by a pump down sequence.

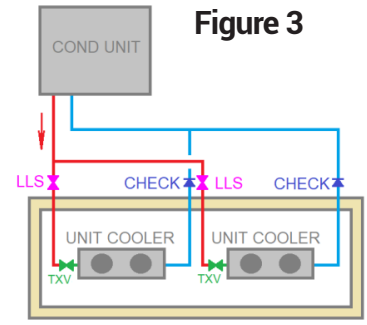

# SYSTEM, LEAK TESTING, & LEAK REPAIRS

After completing field piping for split systems, the system must undergo pressure, leak, and vacuum testing prior to refrigerant charging. Follow these procedures:

## Pressure Testing

- The system must be pressure tested with an inert gas (e.g., nitrogen) for at least one hour using a gauge with a resolution ≤ 5% of test pressure.
- Test pressures:
  - Low side: Low side design pressure.
  - High side: High side design pressure only if isolated; otherwise test the entire system to the low side design pressure.

## Leak Testing

- Add refrigerant to 25–35 PSI, then pressurize with nitrogen to 120–140 PSI. Always use a pressure reducing regulator.
- Allow 20–30 minutes for stabilization.
- Check all connections and components, both factory and field installed (e.g., compressor, coils, valves, controls, and brazed joints) for leaks utilizing a calibrated electronic leak detector or leak detection fluids.
- Note for flammable refrigerants utilizing an electronic leak detector:
  - Sensitivity might not be adequate or might need re-calibration.
  - Detection equipment shall be calibrated in a refrigerant-free area.
  - Ensure that the detector is not a potential source of ignition and is suitable for the refrigerant used.
- Leak detection fluids are suitable for use with most refrigerants; however, avoid detergents containing chlorine, which can react with refrigerants and corrode copper and joints.
  - Examples of fluid leak detection are:
    - soap bubble method
    - fluorescent dye method
  - Repair any leaks following the guidelines in the Leak Repairs section.
- Leaving the system pressurized overnight is recommended to confirm integrity as undetected leaks cause callbacks, refrigerant loss, higher energy costs, moisture contamination, and system failure—especially with POE lubricants, which are highly hygroscopic.

## Evacuation Testing

- After leak testing, the system must be thoroughly evacuated before final charging. The installer must comply with government regulations and use appropriate procedures and equipment to avoid releasing refrigerants into the atmosphere.
- Tools for evacuation:
  - A 2 stage rotary deep vacuum pump.
  - Electronic deep vacuum gauge.
  - Filter drier to remove contaminants (Recommended).
  - Large diameter vacuum lines (minimum 3/8 in OD copper or seamless metal hose, or VACUUM RATED refrigerant hose) as short as practical. Do not use a standard refrigerant charging hoses.
  - Vacuum sealant on all connections and fittings.
  - Oil that is specifically refined for rotary deep vacuum pumps. Change vacuum pump oil frequently; clean oil is essential.

# SYSTEM, LEAK TESTING, & LEAK REPAIRS

- Short Evacuation Testing:
  - Evacuate the system to 450 microns or lower (as required by applicable codes).
  - Isolate the system from the vacuum pump.
  - Monitor for 1 hour. The pressure must not rise above 1000 microns during this period.
- Long Evacuation and Charging Preparation
  - Open compressor service valves.
  - Pull continuous vacuum for minimum of 4 hours; overnight for systems >5 HP.
  - Make the charging line connection with a line purged of air & break the vacuum. Break vacuum only with proper system refrigerant.
  - Pressurize system to 5–10 PSI before disconnecting vacuum pump.
  - **Never start the compressor while the system is under vacuum. Do not use the compressor as a vacuum pump.**

## Safety Precautions

- Under no circumstances shall potential sources of ignition be used in the search for or detection of refrigerant leaks.
- A halide torch (or any other detector using a naked flame) shall not be used.
- If a leak is suspected, all naked flames shall be removed.

## Leak Repair Procedure

- If a leak is suspected, all naked flames shall be removed/extinguished.
- If a leakage of refrigerant is found which requires brazing, all refrigerant shall be recovered from the system, or isolated (by means of shut off valves) in a part of the system remote from the leak.
- When breaking into the refrigerant circuit to make repairs – or for any other purpose– standard refrigeration best practices.

The following procedure shall be adhered to:

1. Safely remove and recover any refrigerant following local and national regulations
2. Evacuate to 450 microns.
   a. Ensure vacuum pump outlet is not near ignition sources and that ventilation is available.
3. Isolate the system from the vacuum pump.
4. Monitor for 1 hour. The pressure must not rise above 1000 microns during this period.
5. Purge with inert gas such as oxygen free nitrogen. Never use compressed air or oxygen.
   a. Break the vacuum with inert gas
   b. Fill until working pressure is achieved
   c. Vent to atmosphere
6. Open the circuit by cutting or brazing.

# REFRIGERANT RECOVERY

## Refrigerant Recovery & Cylinder Handling

- All refrigerant must be recovered during servicing or decommissioning following local and national regulations.
- Use appropriate recovery cylinders that are:
  - Designated and labeled for the recovered refrigerant
  - Equipped with pressure-relief valves and shut off valves in good condition
  - Evacuated and, if possible, cooled prior to recovery.
- Recovery equipment must be ignition safe and well maintained.
- Hoses must have leak-free disconnect coupling and be well maintained.
- Weighing scales must be calibrated and well maintained.
- Recovered refrigerant shall be:
  - Returned to the supplier in the correct recovery cylinder.
  - Accompanied by the relevant waste transfer note.
  - Unmixed in recovery units or cylinders.

## Compressor & Oil Handling

- Compressors or compressor oils must be evacuated to ensure flammable refrigerant does not remain in the lubricant.
- Evacuation must be completed before returning the compressor to the supplier
  - Use electric heating only to assist evacuation.
- Drain oil safely.

# FIELD WIRING

All field wiring must be in compliance with local and national codes. Use only copper conductors of the appropriate size. The equipment specplates are marked with the electrical characteristics. All field wiring should enter the equipment control panels through a conduit fitting or suitable bushing.

Disconnect switches and evaporator branch circuit protection are supplied by the installer and must comply with the governing electrical codes. Be sure the power is disconnected and tighten all connections before starting equipment. If any electrical components are located outdoor, use the appropriate outdoor fixture, fittings, and conduit.

System wiring diagrams are located inside the condensing unit control panel door. Wire components as shown on the wiring diagrams. All equipment must be grounded. To aid the evacuation and provide additional compressor protection during charging and start-up, the crankcase heater should be energized 24 hours before charging begins. After start-up, any vibrating armored cable should be secured and must not contact refrigerant tubing.

The room thermostat and liquid line solenoid should be wired in series per the diagrams. The pumpdown cycle is mandatory to maintain compressor warranty. Carefully follow the diagrams of multiple evaporator systems to ensure proper defrosting of all units.

# TYPICAL FIELD WIRING

This section shows typical field connections for A1 refrigerant equipment. Equipment which is designed for conversion to A2L refrigerants will use a "T" terminal instead of the "38" terminal shown in the following diagrams. For A2L equipment wire connections, consult the A2L FIeld Wiring Section.

***OFF-CYCLE AIR DEFROST***
***WITH OR WITHOUT TIMER***

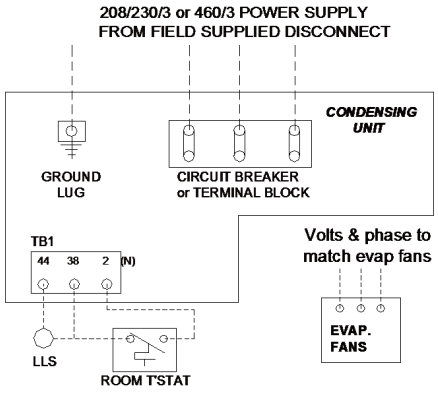


***ALTERNATE UNIT COOLER WIRING***
***AIR DEFROST WITHOUT TIMER***

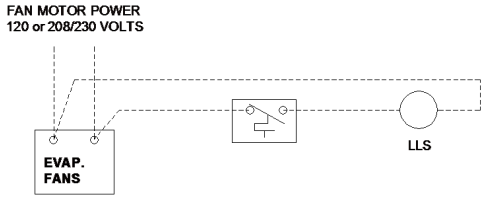


ALL UNITS MUST BE GROUNDED

For factory wiring refer to the diagram in the unit.

If liquid line solenoid (LLS) is factory mounted or if unit has low ambient flooded condenser option, connection to TB1 - 38 terminal ***must*** be made.

***ELECTRIC DEFROST, 1Ø FANS & HEATERS***

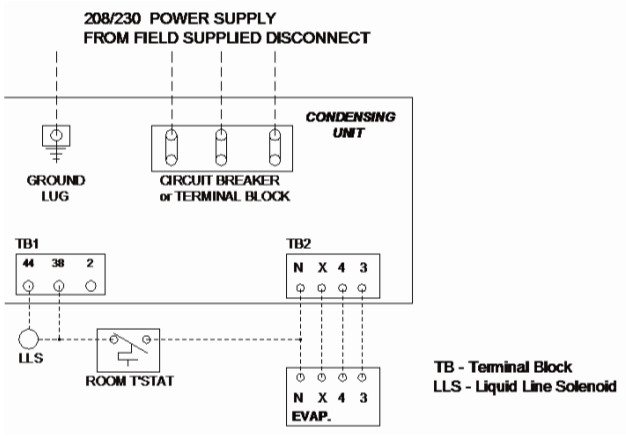

# TYPICAL FIELD WIRING

### *ELECTRIC DEFROST, 1Ø FANS & 3Ø HEATERS*
### FANS POWERED THROUGH CLOCK

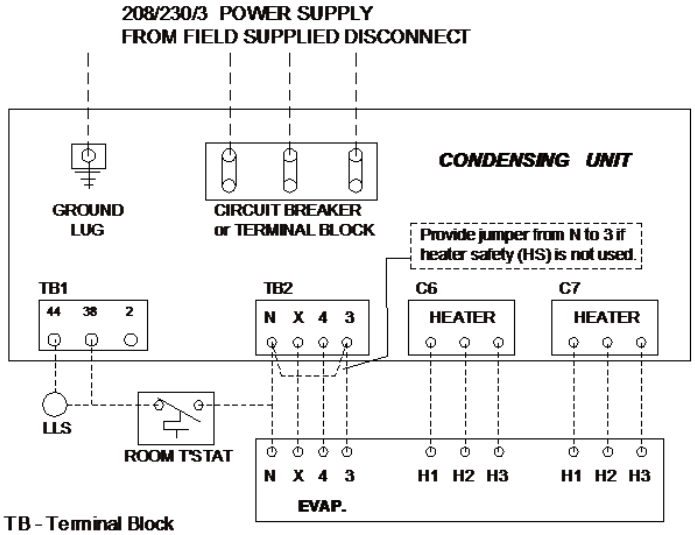


ALL UNITS MUST BE GROUNDED

For factory wiring refer to the diagram in the unit.

If liquid line solenoid (LLS) is factory mounted or if unit has low ambient flooded condenser option, connection to TB1 - 38 terminal ***must*** be made.

### *ELECTRIC DEFROST, MULTIPLE EVAPORATOR, 1Ø FANS & 1Ø HEATERS*
### FANS AND HEATERS POWERED THROUGH CLOCK

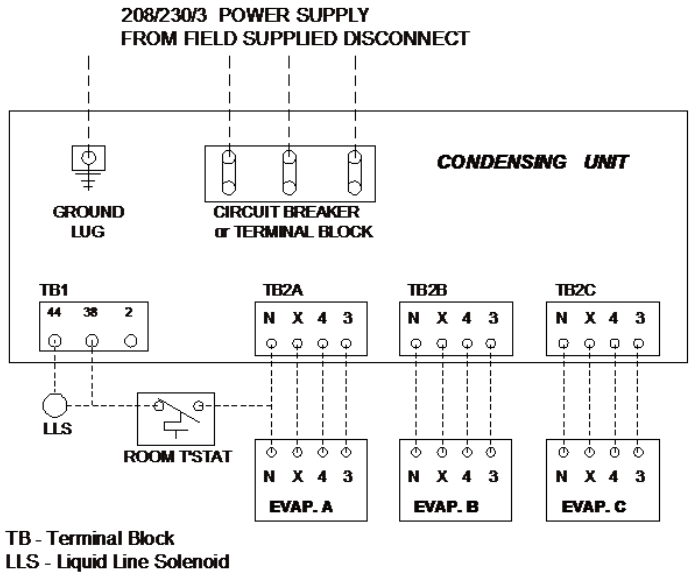


ALL UNITS MUST BE GROUNDED

For factory wiring refer to the diagram in the unit.

If liquid line solenoid (LLS) is factory mounted or if unit has low ambient flooded condenser option, connection to TB1 - 38 terminal ***must*** be made.

The most positive and dependable means of keeping liquid refrigerant out of the compressor crankcase is the use of a pump down cycle..

# TYPICAL FIELD WIRING

*ELECTRIC DEFROST, MULTIPLE EVAPORATOR, 1Ø FANS & 3Ø HEATERS*
**FANS POWERED THROUGH CLOCK**

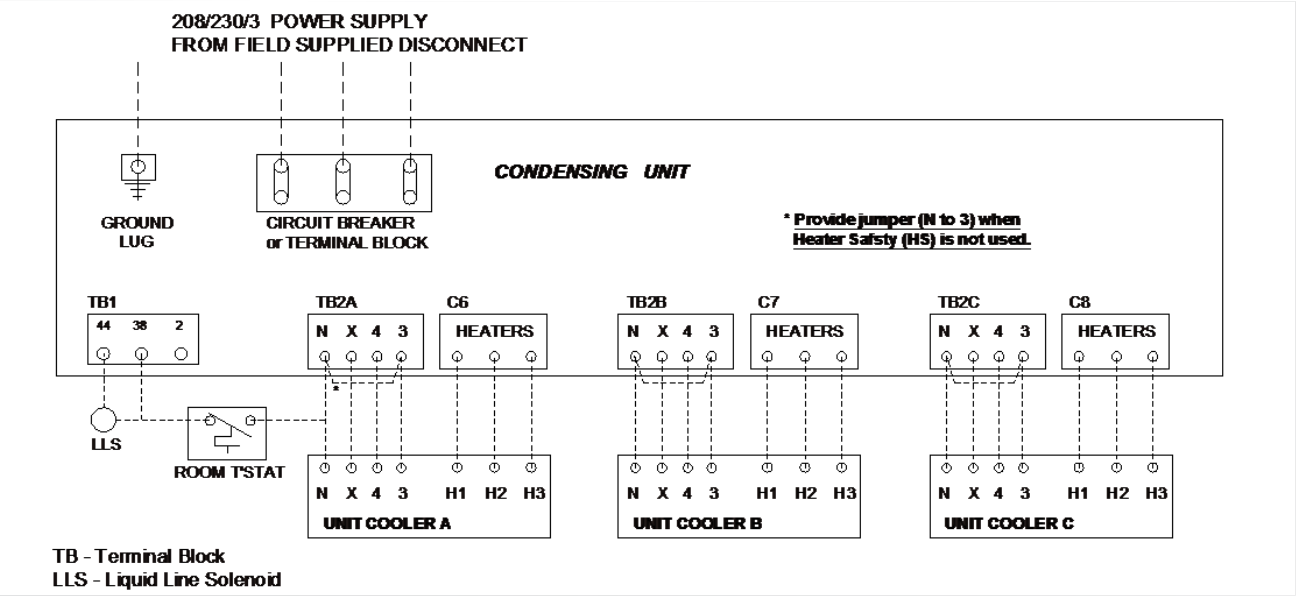


*ELECTRIC DEFROST, MULTIPLE EVAPORATOR, 3Ø FANS & 3Ø HEATERS*

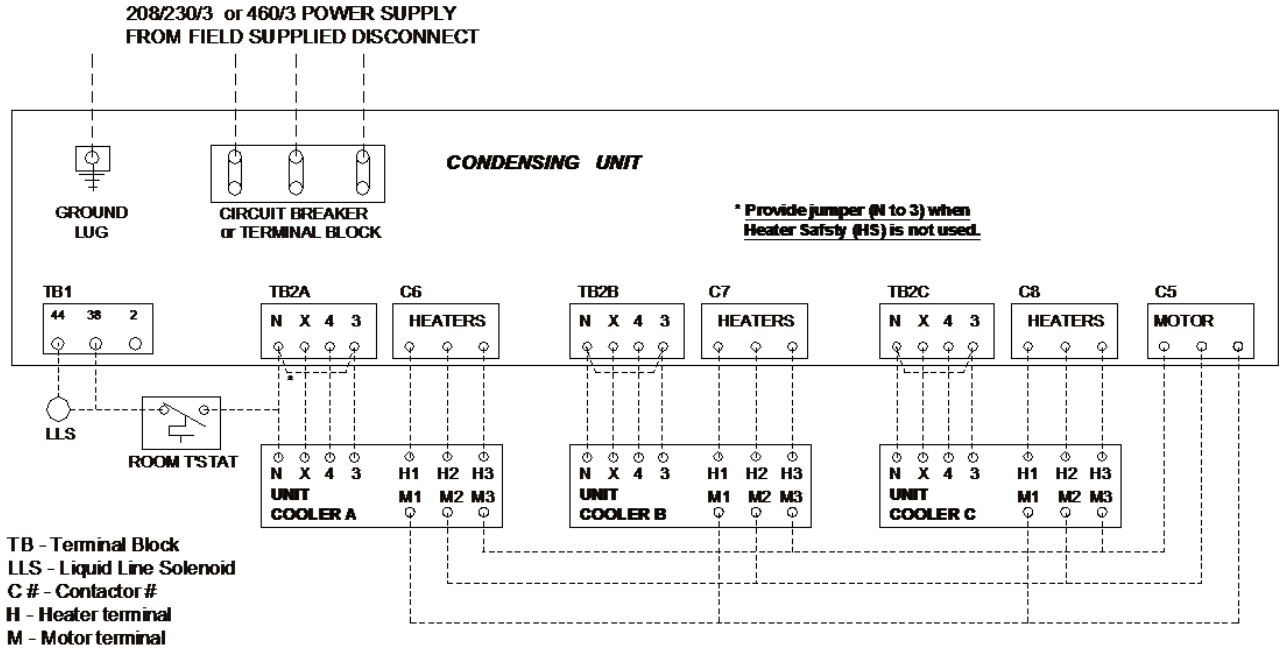


For factory wiring refer to the diagram in the unit. If liquid line solenoid (LLS) is factory mounted or if condensing unit has low ambient flooded condenser option, connection to TB1 - 38 terminal must be made.

# TYPICAL FIELD WIRING

*HOT GAS DEFROST, 1Ø FANS*

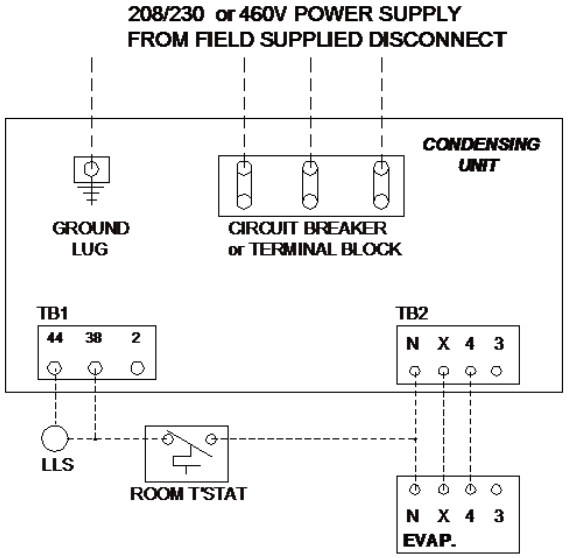


TB - Terminal Block
LLS - Liquid Line Solenoid

*HOT GAS DEFROST, MULTIPLE EVAPORATOR, 1Ø FANS*

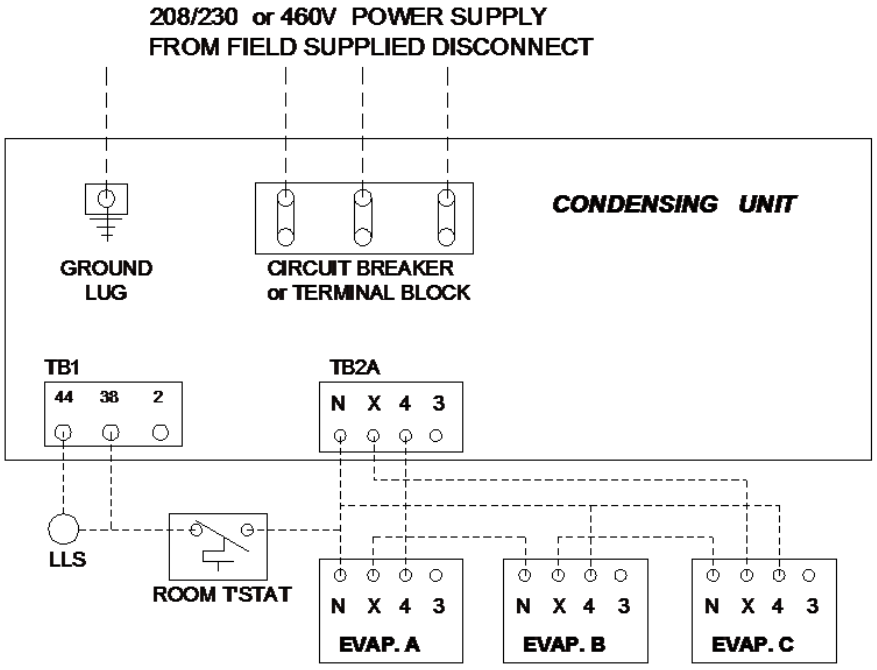


TB - Terminal Block
LLS - Liquid Line Solenoid

For factory wiring refer to the diagram in the unit. If liquid line solenoid (LLS) is factory mounted or if condensing unit has low ambient flooded condenser option, connection to TB1 - 38 terminal must be made.

# QV SERIES CONVENIENCE OUTLET & HEIGHT WIRING

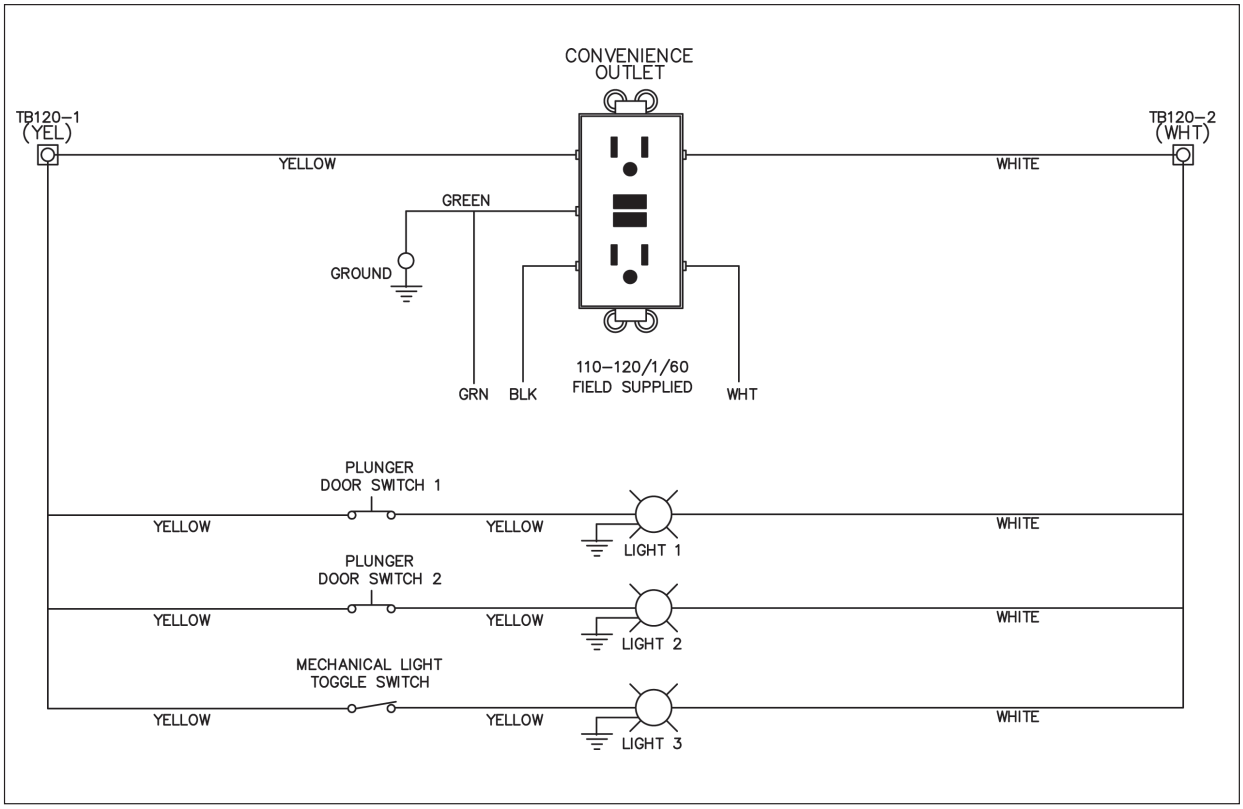

# A2L FIELD WIRING

The following simplified diagram is presented here to explain how the alarm circuit closes the liquid solenoid. The 24V for the alarm circuit is supplied by a small transformer. The 230V solenoid circuit is supplied from terminals 44 and N and may connect back to a condensing unit.

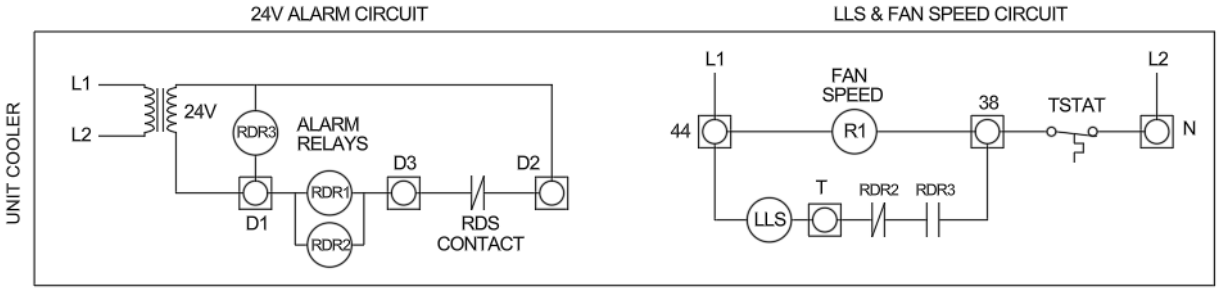


**The liquid line solenoid is controlled in the following way:**

- If 24V is not present the relay RDR3 will be inactive and its contact will be open. The liquid solenoid valve will be closed.
  - In case of Water-Cooled Condensing Units use the following note - If 24V is not present the relay RDR3 will be inactive and its contact will be open. The compressor will shut off.
- If 24V is present and the RDS does not sense a refrigerant leak it will hold the RDS alarm contact open. The relays RDR1 and RDR2 will be inactive. The RDR2 and RDR3 contacts will be closed and the liquid solenoid valve will be open.
- If 24V is present and the RDS senses a refrigerant leak it will release the RDS alarm contact to its normally closed state. The RDR1, RDR2, and RDR3 relays will be active. The RDR3 contact will be closed but the RDR2 contact will be open and the liquid solenoid valve will be closed.
- If 24V is present but the RDS has failed the RDS contact will be closed. The RDR1 and RDR2 relays will be active. The RDR3 contact will be closed but the RDR2 contact will be open and the liquid solenoid valve will be closed.

**The RDR relays do numerous things. -Some of these are not shown in this simplified diagram.**

- Closes the liquid solenoid in the event of a leak or sensor failure.
- Closes the liquid solenoid if the 24V transformer fails.
- Terminates an active defrost cycle in the event of a leak or sensor failure.
- Bypasses the drip delay period in the event of a leak or sensor failure.
- Causes unit cooler fans to run in the event of a leak or sensor failure. The fan speed is dependent upon room temperature.
- Closes the dry alarm contact provided for customer use in the event of a leak or sensor failure.
- Matched systems using multiple unit coolers on one condensing unit must have wired connections on the D2 and D3 terminals. These connections enable the unit coolers to act as a group during a leak. It is important to match polarities when connecting multiple unit coolers!

# A2L FIELD WIRING

The following simplified diagram shows two unit cooler alarm and solenoid circuits connected together for use in a matched system. With this scheme only one RDS contact must close to cause all unit cooler RDR relays to trigger the required leak response. Another way of saying this is that only one sensor must detect a leak to cause all unit coolers to respond appropriately.

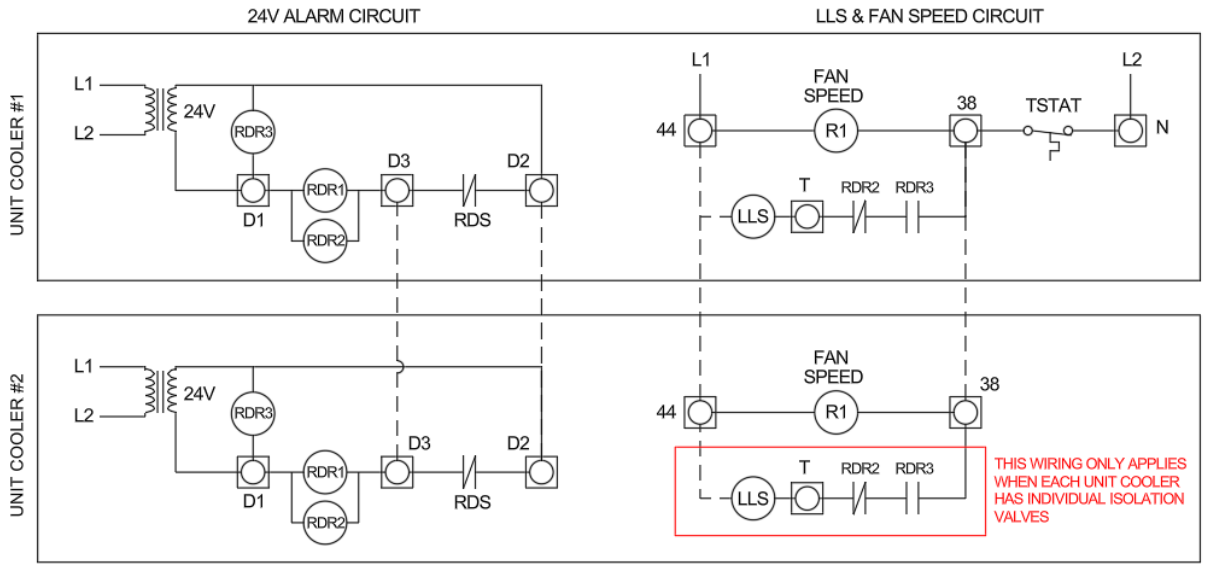


**The following notes maay be referenced in the interconnection diagrams as indicated:**

a. These terminals may be used to power an electronic thermostat.

b. Make this connection if the condensing unit has an unloader or hot gas bypass solenoid.

c. Alarm relay terminals for customer use: Normally Open, 240Vac, 40A

d. This solenoid circuit is only provided if each unit cooler has its own isolation valves.

e. This connection applies to 3 phase defrost kits.

f. For additional unit coolers, daisy chain these connections. Wire condensing unit TB3-2 to the last unit cooler terminal N and connect 1 to N for each unit cooler back to the condensing unit TB3-1 as shown.

The following interconnection diagrams show the field connections for common defrost configurations.

AIR DEFROST WITHOUT CONDENSING UNIT DEFROST TIMER

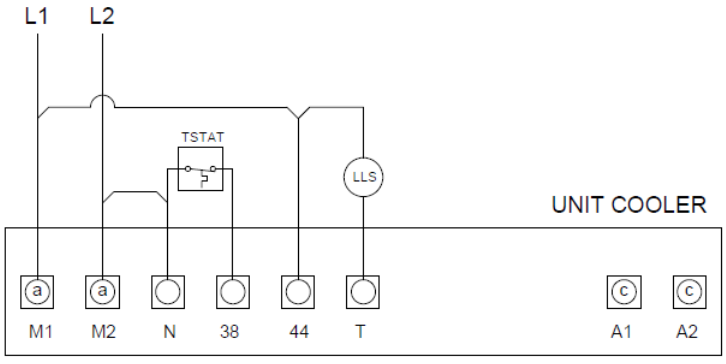

AIR DEFROST WITHOUT TIMER, MULTIPLE UNIT COOLERS

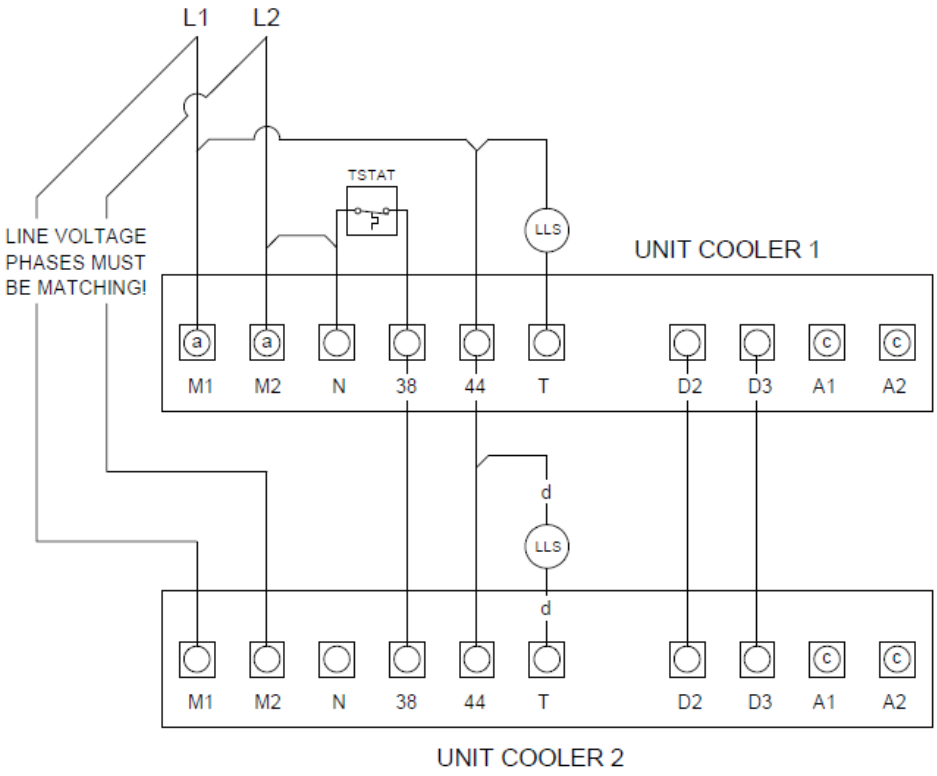


AIR DEFROST WITH CONDENSING UNIT DEFROST TIMER

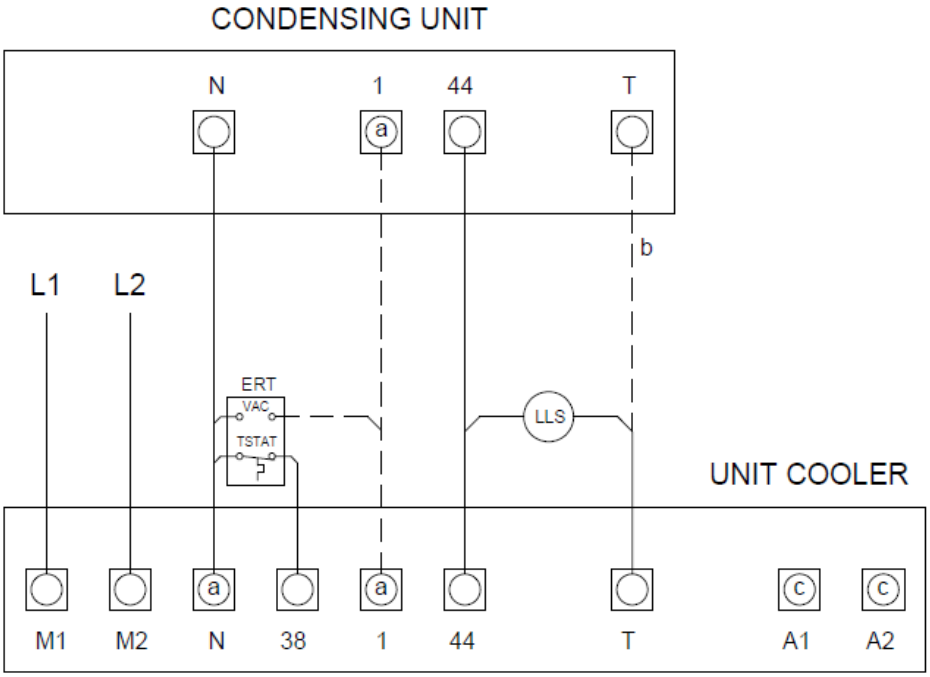

AIR DEFROST WITH CONDENSING UNIT DEFROST TIMER, MULTIPLE UNIT COOLERS

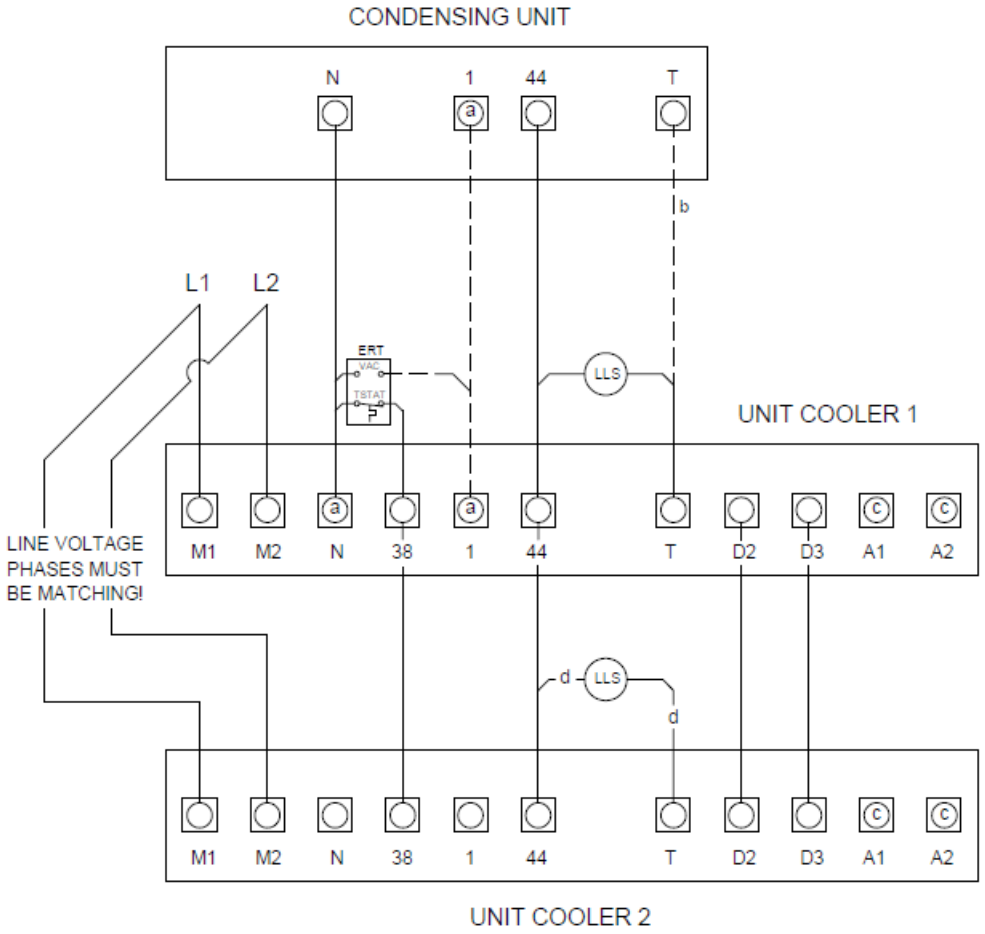


AIR DEFROST KITS: TRM-EF-15A, TMR-EF-30A

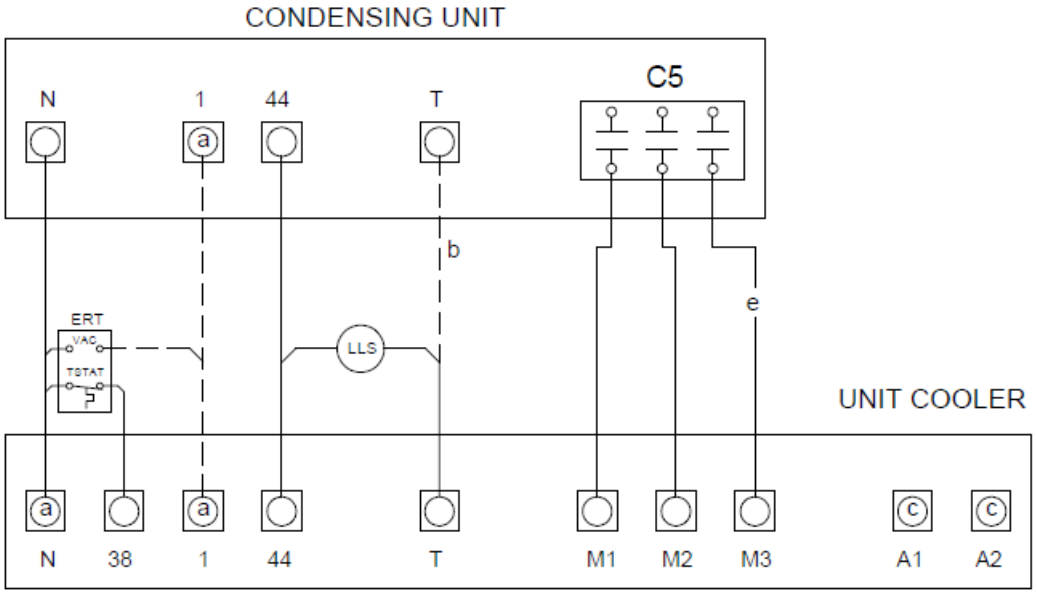

ELECTRIC DEFROST KITS: ED5-A2, ED6-A2, ED7-A2, ED10-A2

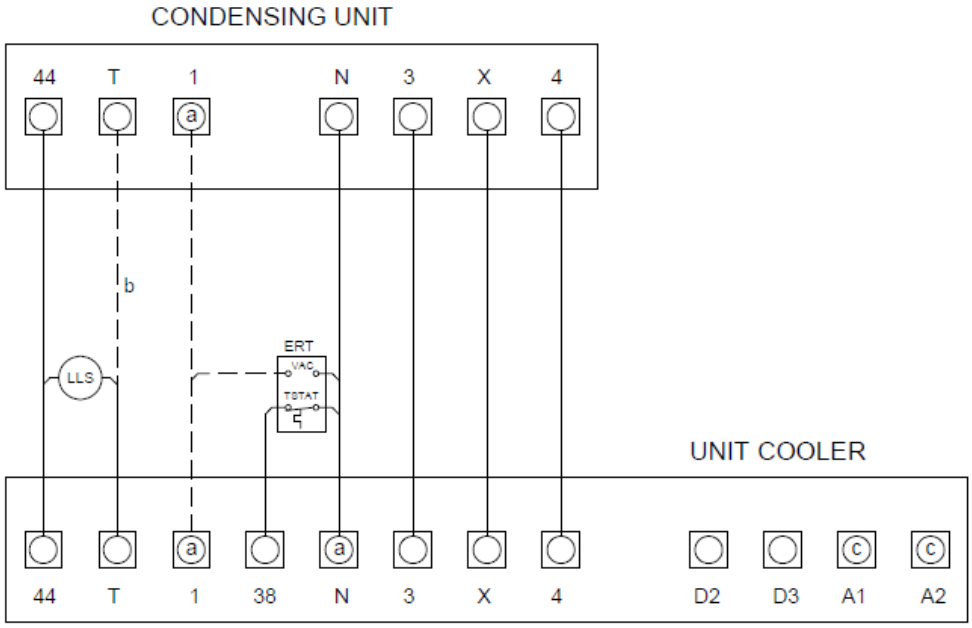


ELECTRIC DEFROST KIT: ED20-A2

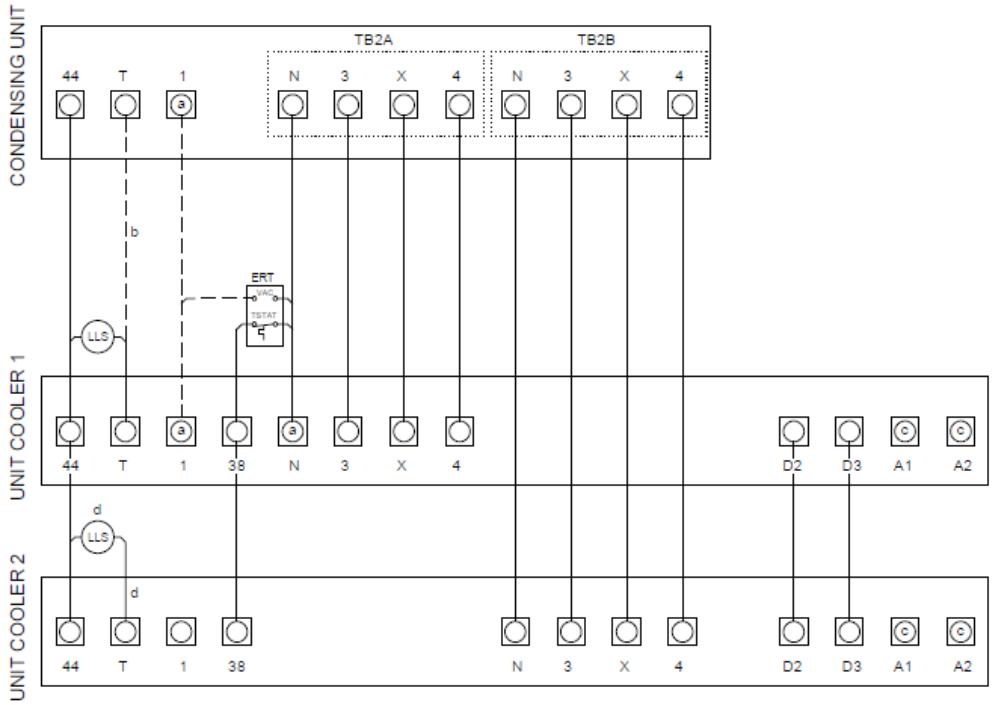

ELECTRIC DEFROST KIT: ED30-A2

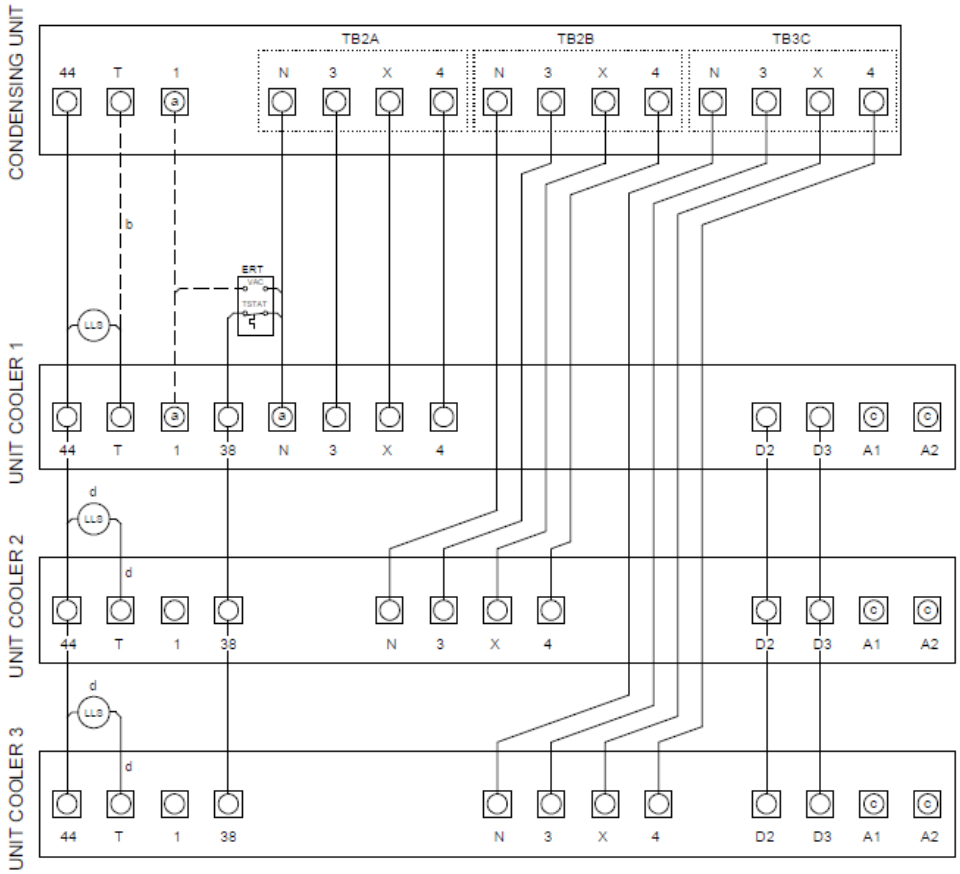


ELECTRIC DEFROST KITS: ED11-A2, ED11-B2

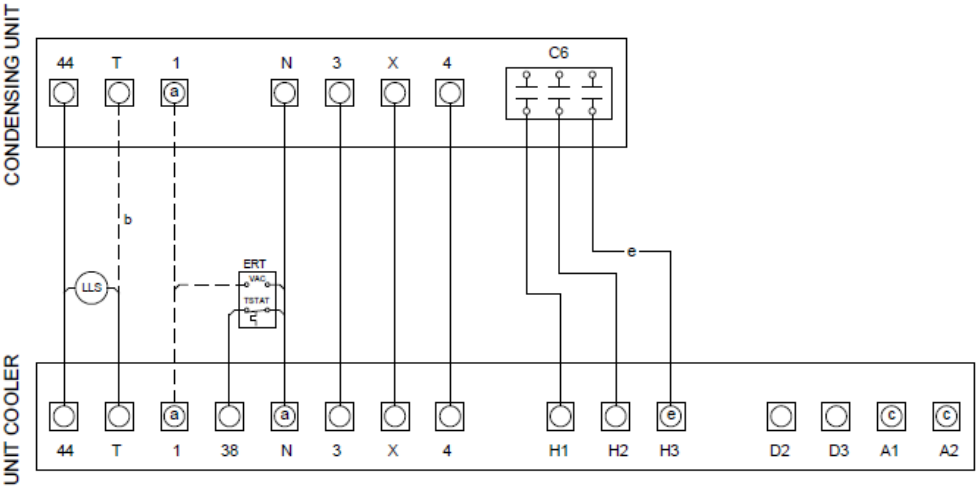


Note - A fuseblock option (not shown) is available for the contactor circuit (C6).

ELECTRIC DEFROST KIT: ED21-A2, ED21-B2, ED23-A2

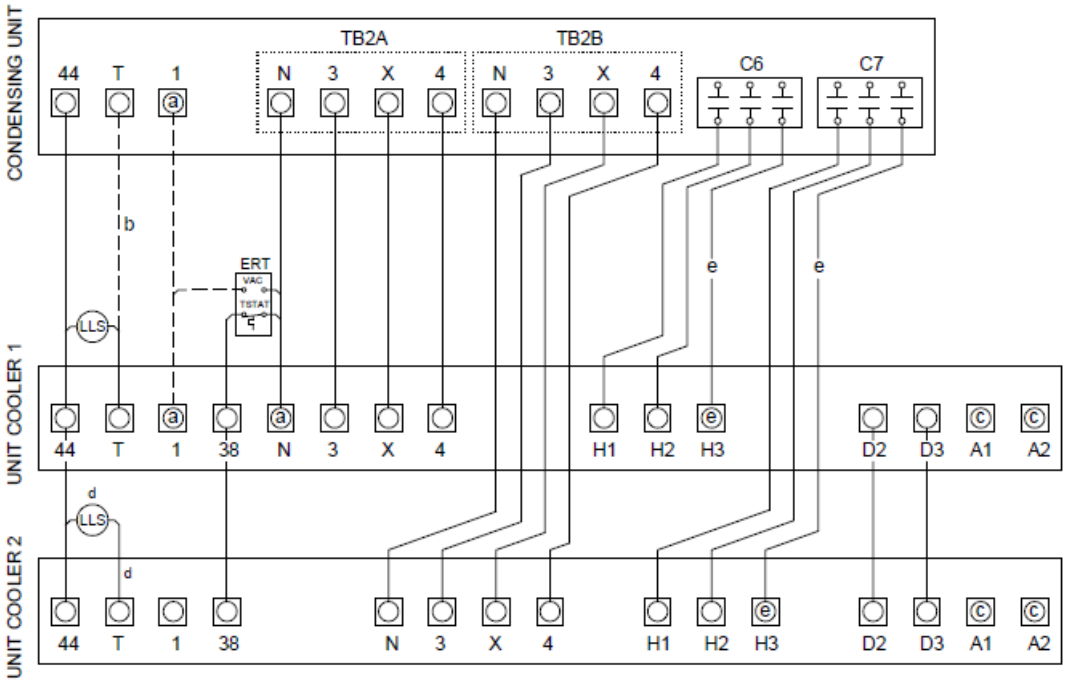


Note - A fuseblock option (not shown) is available for the contactor circuits (C6 & C7).

ELECTRIC DEFROST KIT: ED33-A2

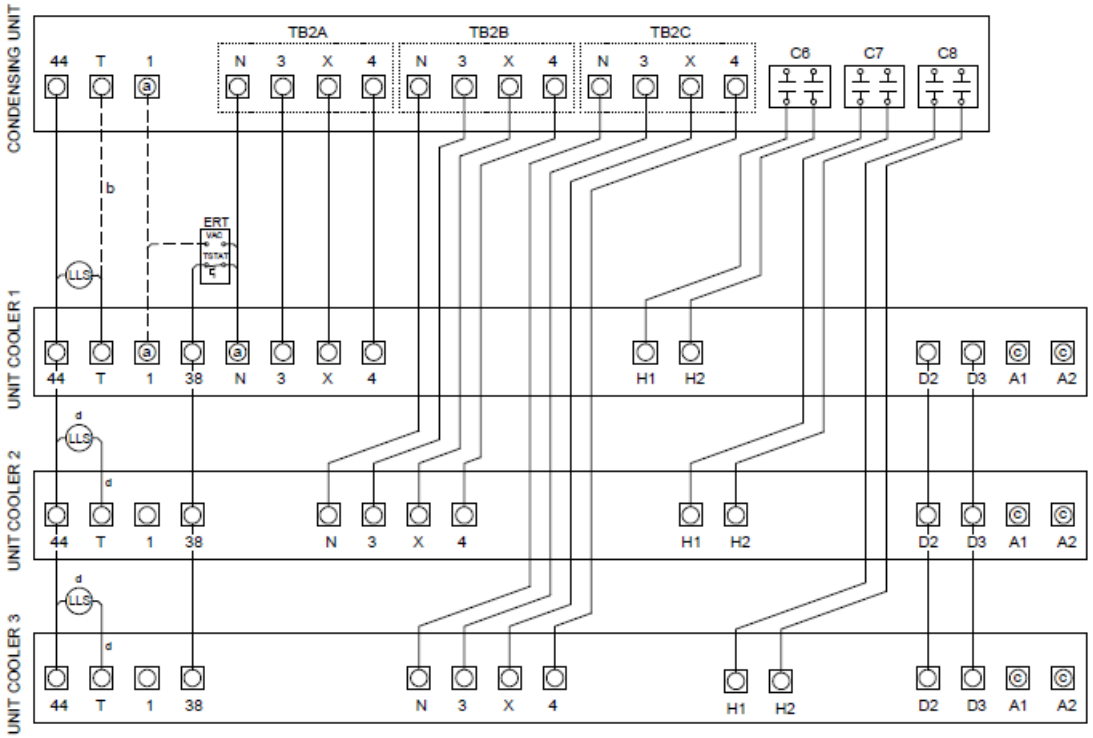


Note - A fuseblock option (not shown) is available for the contactor circuits (C6, C7, & C8).

ELECTRIC DEFROST KITS:
ED12-A2, -A4, -B2, -B4, -C2, -C4
ED17-A2, -A4, -B2, -B4, -C2, -C4
ED18-A2, -A4, -B2, -B4, -C2, -C4
DMA15, DMA20, DMA24, DMA30
DMA35, DMA40, DMA48

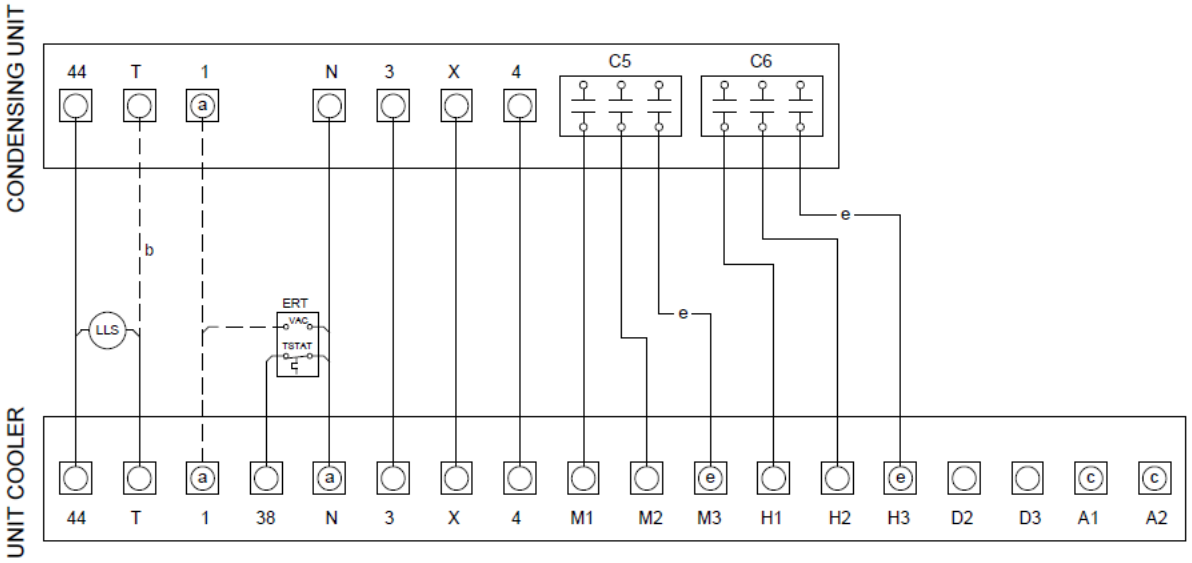


Note - A fuseblock option (not shown) is available for the contactor circuits (C5 & C6).

ELECTRIC DEFROST KIT:
ED22-A2, -A4, -B2, -B4, -C2, -C4
ED24-B2, -C2, -C4
DMB35, DMB40, DMB48, DMB60, DMB96

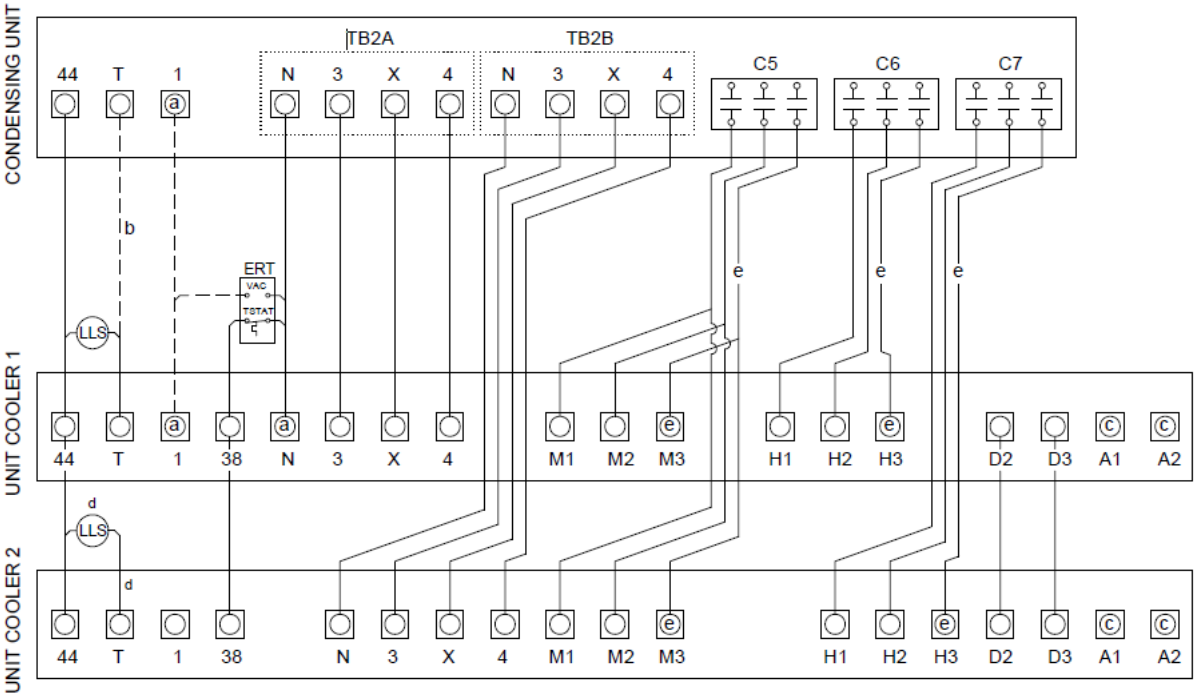


Note - A fuseblock option (not shown) is available for the contactor circuits (C5 through C7).

ELECTRIC DEFROST KITS: DMC35, DMC40, DMC48, DMC60, DMC96

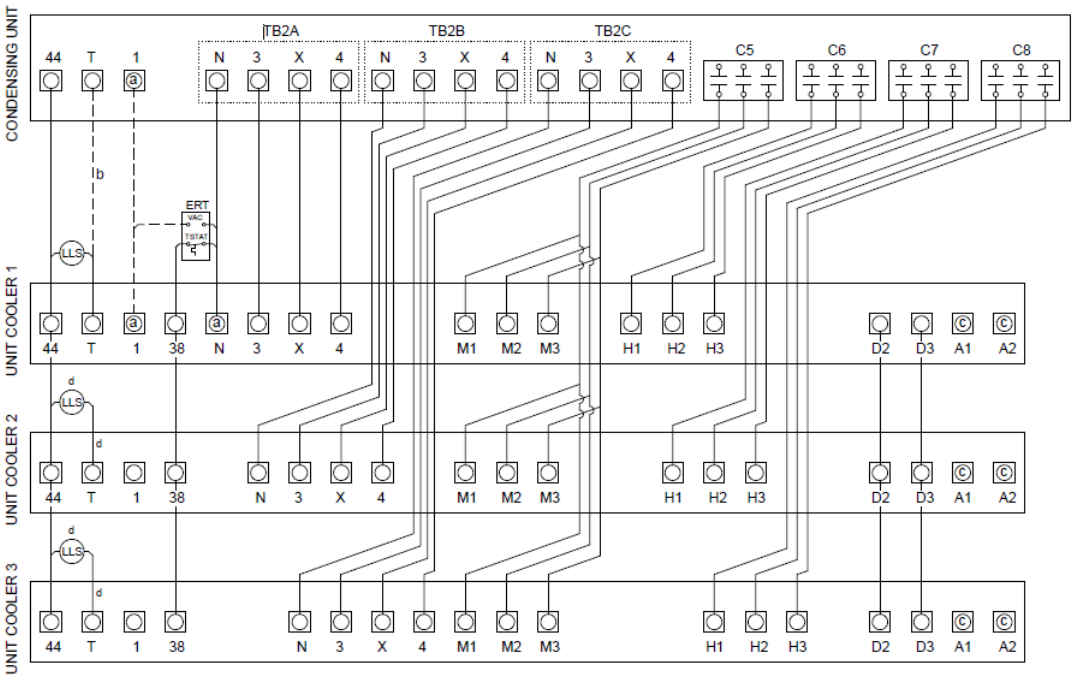


Note - A fuseblock option (not shown) is available for the contactor circuits (C5 through C8).

ELECTRIC DEFROST KITS: DMD35, DMD40, DMD48, DMD60, DMD96

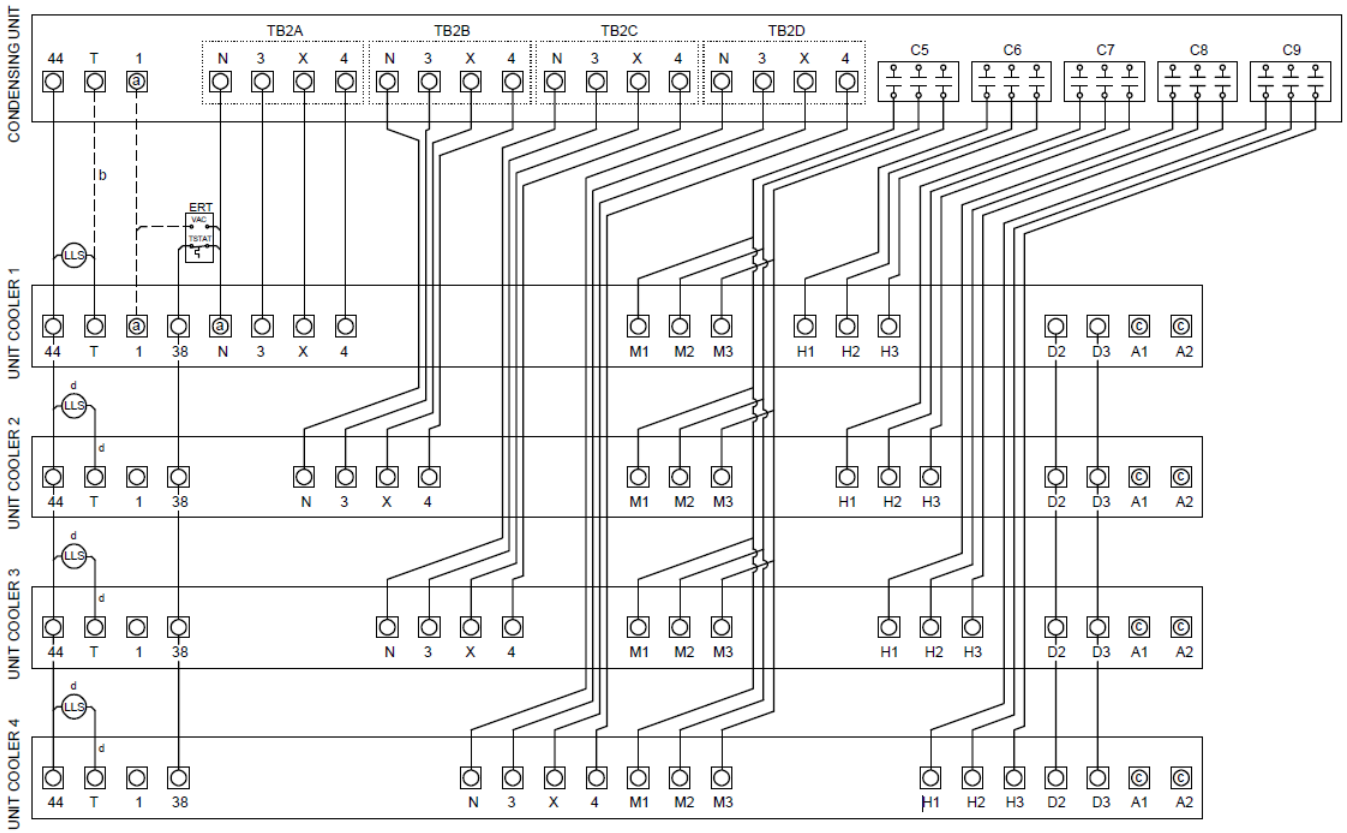


Note - A fuseblock option (not shown) is available for the contactor circuits (C5 through C9).

ECONET EQUIPPED UNIT COOLER, 115/230V, AIR OR ELECTRIC DEFROST, NO CONNECTION TO CONDENSING UNIT

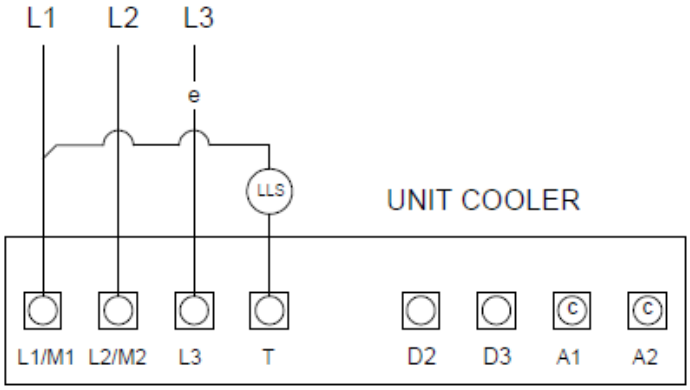


ECONET EQUIPPED UNIT COOLERS, 115/230V, AIR OR ELECTRIC DEFROST, NO CONNECTION TO CONDENSING UNIT, MULTIPLE UNIT COOLERS

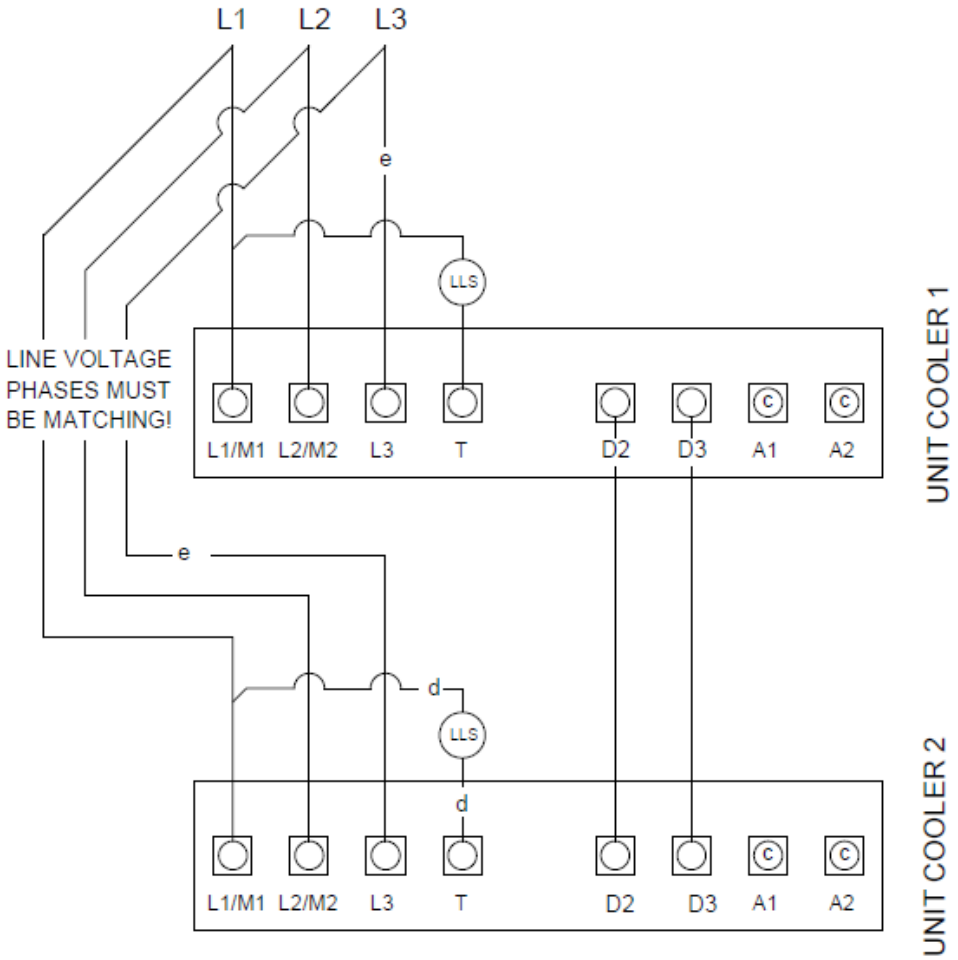

ECONET EQUIPPED UNIT COOLER, 460V, AIR OR ELECTRIC DEFROST, NO CONNECTION TO CONDENSING UNIT

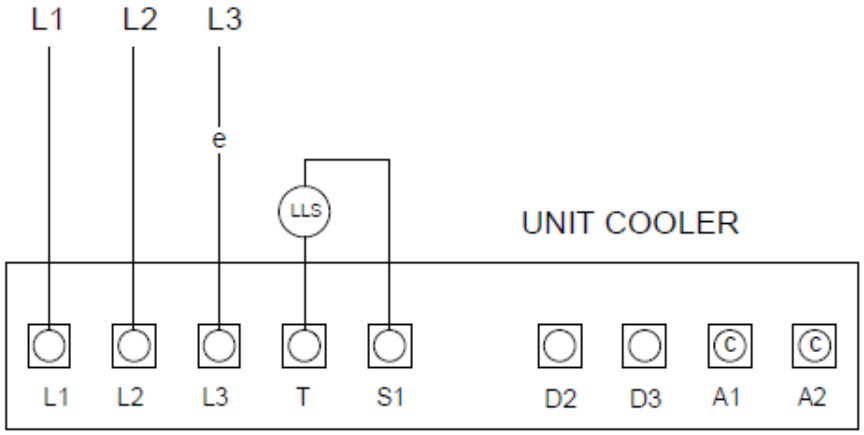


ECONET EQUIPPED UNIT COOLERS, 460V, AIR OR ELECTRIC DEFROST, NO CONNECTION TO CONDENSING UNIT, MULTIPLE UNIT COOLERS

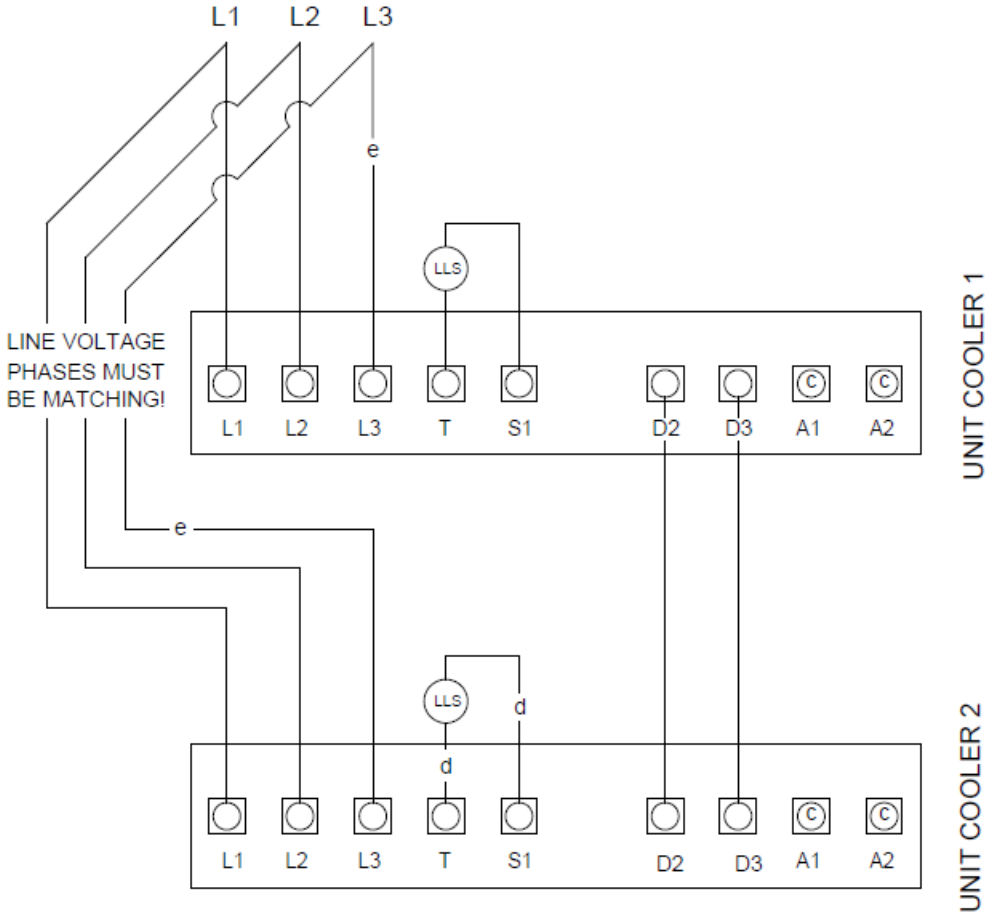

ECONET EQUIPPED, ELECTRIC DEFROST, CONDENSING UNIT CONNECTIONS, 230V

LOW PROFILE, CENTER MOUNT, OR LOW VELOCITY

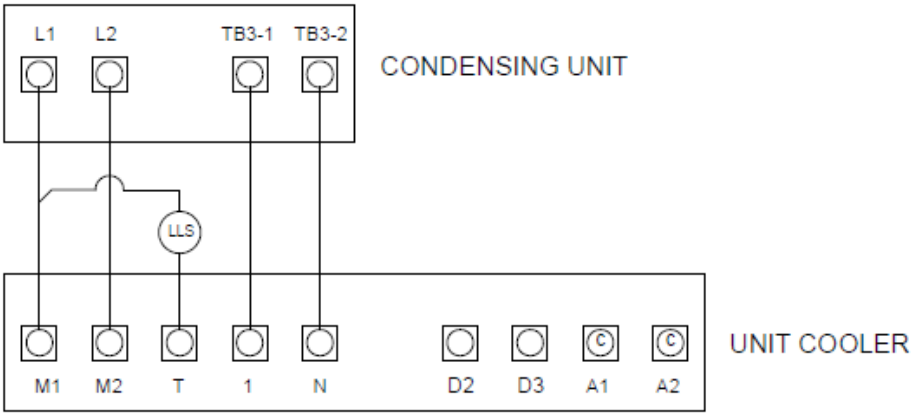


ECONET EQUIPPED, ELECTRIC DEFROST, CONDENSING UNIT CONNECTIONS, 230V, MULTIPLE UNIT COOLERS

LOW PROFILE, CENTER MOUNT, OR LOW VELOCITY

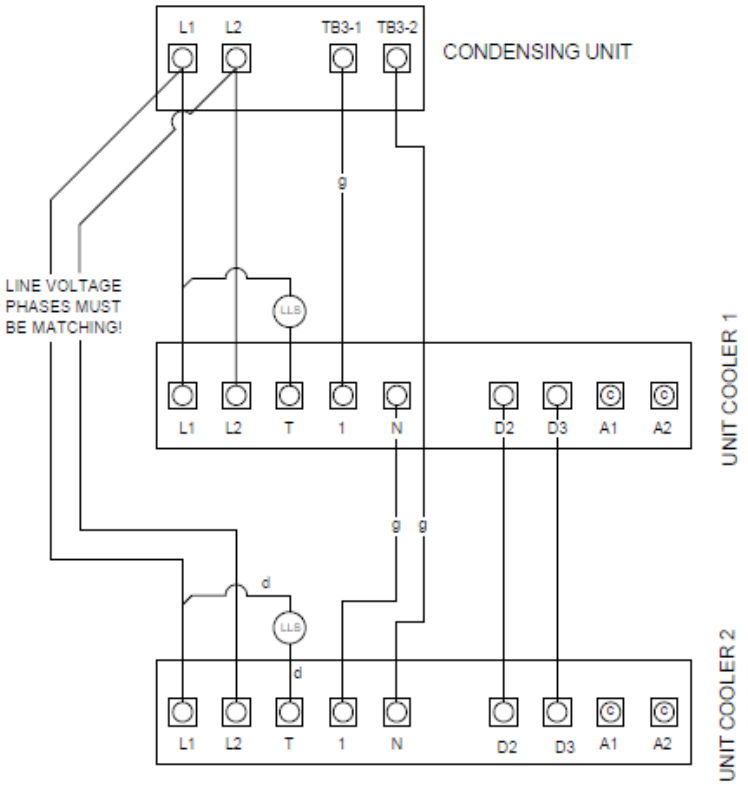

# LEAK DETECTOR SEQUENCE OF OPERATION

All HTPG A2L Unit Coolers are equipped with factory mounted leak detection sensors to be used in conjunction with field mounted safety shut off valve(s) and check valves to satisfy safety mitigation requirements. In case of a leak event, the alarm circuit will respond as detailed below.

### Non-EcoNet Enabled Unit Coolers Sequence of Operation

1. Defrost is Terminated
2. Safety Shut-off Valve is Closed
3. Unit Cooler Pumps Down
4. Fan(s) Remain Active
5. Alarm Relay Closes

### EcoNet Enabled Unit Coolers Sequence of Operation

1. Defrost is Terminated
2. Safety Shut-off Valve is Closed
3. Electronic Expansion Valve Opens
4. Unit Cooler Pumps Down
5. Fan(s) Remain Active
6. Alarm Relay Closes
7. Leak Event Logged

### Water-Cooled condensing Unit Sequence of Operation

1. Compressor Shuts Off
2. Alarm Relay Closes

When the leak concentration falls below the alarm setpoint and an hour or longer has elapsed the system will restart automatically. If the power to the unit is cycled, the alarm will reset immediately.

The HTPG leak detectors perform a routine self-check to ensure that the sensor is operating correctly. The current sensor version does not have any indication to demonstrate this function or to show sensor health. Also, there are no buttons to force an alarm response for a field test. If the sensor fails the alarm circuit will behave as if a leak is detected.

If a leak detector becomes damaged, contact HTPG to order a replacement. Non-factory replacement sensors are not permissible and may cause damage or unsafe operation.

During installation and service protect the sensors from silicone sealant fumes as this may cause damage to the sensitivity. This may be done by temporarily removing the sensor or by covering the sensor with plastic film during caulking operations.

# CHARGING

### Preventing Cross-Contamination

- Use dedicated charging equipment for each refrigerant type.
- Keep hoses and lines as short as possible to reduce refrigerant loss and contamination.

### Cylinder Handling

- Keep cylinders upright or positioned as directed by the manufacturer.
- Secure cylinders to prevent tipping or damage.

# CHARGING

## System Grounding

- Ensure the refrigeration system is properly grounded before charging to prevent static discharge.

## Charging Process

- Ensure the system has undergone pressure, leak, and vacuum testing as defined in the System and Leak Testing section.
- Energize the control circuit 24 hours before charging to open the liquid line solenoid and operate the crankcase heater.
- Attach high and low pressure gauges.
- Follow manufacturer instructions for charging method (liquid or vapor).
- Calculate refrigerant capacity based on system volume (typically 80% of condenser/receiver/liquid line capacity or 90% of receiver/liquid line capacity).
  - For refrigerant blends (400-series, and all A2L refrigerants), liquid charging is mandatory.
- Open the compressor discharge valve fully
- Open the suction valve 2–3 turns with a valve stem wrench attached for quick adjustment.
- Charge initial liquid refrigerant through a filter-drier into the receiver outlet or downstream of the liquid line.
  - Use a refrigerant scale for accurate measurement
  - Usually 50–60% of the system charge can be added before it's necessary to run the compressor for the system to accept more refrigerant.
  - It may be necessary to throttle the compressor suction valve to keep suction pressures reasonable and prevent tripouts during charging and pull-down.
  - Charge slowly to avoid overfilling.
- Never introduce liquid directly into the suction of the compressor, but metered liquid may be allowed when introduced slowly as vapor through a ball valve.
- For systems with floating head pressure control or low-ambient flooded condenser head pressure control:
  - If the condensing temperature is < the target of 80°F, part of the condenser coil can be blocked to raise the condensing temperature to ≥ 80°F. Be careful not to block the air blast against the compressor.
  - If the condenser temperature is ≥ than the target of 80°F, charge the system until the sight glass just clears, being careful not to overcharge. Then weigh in the additional pounds of refrigerant specified in section labeled **POUNDS OF ADDITIONAL REFRIGERANT CHARGE TO ADD FOR FLOODED HEAD PRESSURE CONTROLS** to provide adequate charging for all ambient conditions. The actual charge should not exceed the calculated systems capacity.
- Label the system with the refrigerant type, charge amount, and charging date. Ensure all labels meet applicable code requirements (e.g., ANSI/ASHRAE 15, UL 60335 2 40).
- Perform a final leak test using electronic detection or soap solution, confirming no leaks prior to leaving.

## Start Up and Monitoring

- After charging and room pull down is complete, verify the system can pump down:
  - Raise the room thermostat setting to close the liquid line solenoid or EEV on EcoNet units
  - Verify the system pumps down and shuts off at the low pressure cutout setting in section labeled **GENERAL REPAIRS**.
- Remove any condenser blockages and return thermostat settings to normal.

# CHARGING

## Start Up and Monitoring

- Closely monitor operation for the first 2–3 hours. Utilize the Start Up Check List at the end of the IOM to assist you:
  - Watch for flood-back and adjust the expansion valve if needed.
  - Observe system pressures
  - Verify fan operation and correct rotation.
    - On low temperature systems, it may be necessary to jumper the fan delay control to keep the fans running until the room pulls down far enough below the fan delay switch setting that the fans keep running without the jumper in place.
- Confirm compressor oil levels are satisfactory.
- Check voltage is within ±10% of specification plate rating and amperage is balanced across all three lines.
- Inspect piping and electrical conduit for vibration and add support if needed.
- Fully open suction valve.
- After the room reaches design temperature and holds for 24 hours, complete the Refrigeration System Service Record at the end of the IOM.

**Condenser Flood Valve and Charging Values**

| Model | Application | R404A, R407A, R407C, R448A, R449A | R454A/R454C/R455A* | Target Condensing Temp. |
|---|---|---|---|---|
| Next-Gen 1/2 to 6 HP | MT | 148 psig | 148 psig | 80 °F |
| | LT | 148 psig | 123 psig | |
| Next-Gen II 3 to 22 HP | MT | 148 psig | 148 psig | |
| | LT | 148 psig | 123 psig | |
| QV-Series 15 to 100 HP ^ | MT | 148 psig | 148 psig | |
| | LT | 148 psig | 123 psig | |

^Adjustable flood valves must be field adjusted.
*For LT R455A OS013, OS015, and DS022 models use 103 psig instead of 123 psig

# REFRIGERANT CHARGE PER 100 FT. OF LINE

| | | | | Suction Gas | | | | |
|---|---|---|---|---|---|---|---|---|
| **Refrigerant** | **Line Size** | **Liquid** | **Discharge Gas** | **-40°F** | **-20°F** | **0°F** | **20°F** | **40°F** |
| R407 | 3/8 | 4.2 | 0.4 | 0.0 | 0.0 | 0.0 | 0.1 | 0.1 |
| | 1/2 | 7.9 | 0.7 | 0.0 | 0.0 | 0.1 | 0.1 | 0.2 |
| | 5/8 | 12.6 | 1.2 | 0.0 | 0.1 | 0.1 | 0.2 | 0.3 |
| | 7/8 | 25.9 | 2.4 | 0.1 | 0.2 | 0.3 | 0.4 | 0.6 |
| | 1-1/8 | 44.1 | 4.1 | 0.2 | 0.3 | 0.4 | 0.6 | 1 |
| | 1-5/8 | 94.8 | 8.7 | 0.4 | 0.6 | 0.9 | 1.4 | 2 |
| | 2-1/8 | 164.6 | 15.2 | 0.6 | 1 | 1.6 | 2.4 | 3.5 |
| | 2-5/8 | 253.5 | 23.4 | 1 | 1.6 | 2.5 | 3.7 | 5.5 |
| | 3-1/8 | – | 33.3 | 1.4 | 2.2 | 3.5 | 5.3 | 7.8 |
| | 4-1/8 | – | 58.3 | 2.4 | 3.9 | 6.2 | 9.3 | 13.6 |
| R448/R449A | 3/8 | 4.1 | 0.4 | 0.0 | 0.0 | 0.0 | 0.1 | 0.1 |
| | 1/2 | 7.6 | 0.7 | 0.0 | 0.1 | 0.1 | 0.1 | 0.2 |
| | 5/8 | 12.1 | 1.1 | 0.0 | 0.1 | 0.1 | 0.2 | 0.3 |
| | 7/8 | 24.8 | 2.3 | 0.1 | 0.2 | 0.3 | 0.4 | 0.6 |
| | 1-1/8 | 42.3 | 4 | 0.2 | 0.3 | 0.4 | 0.7 | 1 |
| | 1-5/8 | 90.9 | 8.6 | 0.4 | 0.6 | 0.9 | 1.4 | 2 |
| | 2-1/8 | 157.8 | 14.9 | 0.6 | 1.1 | 1.6 | 2.4 | 3.6 |
| | 2-5/8 | 243.0 | 23 | 1 | 1.6 | 2.5 | 3.8 | 5.5 |
| | 3-1/8 | – | 32.8 | 1.4 | 2.3 | 3.6 | 5.4 | 7.8 |
| | 4-1/8 | – | 57.3 | 2.5 | 4 | 6.3 | 9.4 | 13.6 |
| R454A/R454C/R455A | 3/8 | 3.9 | 0.4 | 0.0 | 0.0 | 0.0 | 0.1 | 0.1 |
| | 1/2 | 7.2 | 0.7 | 0.0 | 0.1 | 0.1 | 0.1 | 0.2 |
| | 5/8 | 11.5 | 1.1 | 0.1 | 0.1 | 0.1 | 0.2 | 0.3 |
| | 7/8 | 23.6 | 2.3 | 0.1 | 0.2 | 0.3 | 0.4 | 0.6 |
| | 1-1/8 | 40.1 | 3.9 | 0.2 | 0.3 | 0.4 | 0.6 | 0.9 |
| | 1-5/8 | 86.3 | 8.3 | 0.4 | 0.6 | 0.9 | 1.4 | 2 |
| | 2-1/8 | 149.8 | 14.4 | 0.7 | 1.1 | 1.6 | 2.4 | 3.5 |
| | 2-5/8 | 230.7 | 22.2 | 1 | 1.6 | 2.5 | 3.7 | 5.4 |
| | 3-1/8 | – | 31.6 | 1.5 | 2.3 | 3.6 | 5.3 | 7.7 |
| | 4-1/8 | – | 55.3 | 2.6 | 4.1 | 6.3 | 9.3 | 13.4 |

## POUNDS OF ADDITIONAL REFRIGERANT CHARGE TO ADD FOR FLOODED HEAD PRESSURE CONTROLS

| Dual Rated Next-Gen - 1/2 to 6 HP Condensing Units | | | | |
|---|---|---|---|---|
| Model | Lbs. to Add | | | |
| | R404A | R407A | R448A/ R449A | R454A/ R454C/ R455A |
| ON060M4A | 4.0 | 4.4 | 4.2 | 4.0 |
| ON080M4A | 4.0 | 4.4 | 4.2 | 4.0 |
| ON100M4A | 4.0 | 4.4 | 4.2 | 4.0 |
| ON130E4A | 4.0 | 4.4 | 4.2 | 4.0 |
| ON150E4A | 7.2 | 7.8 | 7.5 | 7.1 |
| ON180E4A | 7.2 | 7.8 | 7.5 | 7.1 |
| ON200E4A | 8.3 | 9.1 | 8.7 | 8.3 |
| ON250E4A | 8.3 | 9.1 | 8.7 | 8.3 |
| ON280E4A | 15.8 | 17.2 | 16.5 | 15.7 |
| ON300E4A | 15.8 | 17.2 | 16.5 | 15.7 |
| ON350E4A | 15.8 | 17.2 | 16.5 | 15.7 |
| ON400E4A | 15.8 | 17.2 | 16.5 | 15.7 |
| ON450E4A | 15.8 | 17.2 | 16.5 | 15.7 |
| ON500E4A | 15.8 | 17.2 | 16.5 | 15.7 |
| ON600E4A | 15.8 | 17.2 | 16.5 | 15.7 |
| ON100L4A | 3.1 | 3.3 | 3.2 | 3.0 |
| ON130L4A | 3.1 | 3.3 | 3.2 | 3.0 |
| ON160L4A | 3.1 | 3.3 | 3.2 | 3.0 |
| ON230L4A | 5.4 | 5.9 | 5.6 | 5.3 |
| ON250L4A | 8.3 | 9.1 | 8.7 | 8.3 |
| ON300L4A | 8.3 | 9.1 | 8.7 | 8.3 |
| ON350L4A | 8.3 | 9.1 | 8.7 | 8.3 |
| ON400L4A | 11.9 | 12.9 | 12.4 | 11.7 |
| ON500L4A | 11.9 | 12.9 | 12.4 | 11.7 |
| ON600L4A | 11.9 | 12.9 | 12.4 | 11.7 |

| A1 Next-Gen 1/2 to 6 HP Condensing Units | | | |
|---|---|---|---|
| Model | Lbs. to Add | | |
| | R404A | R407A | R448A/ R449A |
| O060M4S | 2.1 | 2.3 | 2.2 |
| O080M4S | 2.1 | 2.3 | 2.2 |
| O100M4S | 2.1 | 2.3 | 2.2 |
| O130E4S | 2.1 | 2.3 | 2.2 |
| O150E4S | 3.8 | 4.1 | 4 |
| O180E4S | 3.8 | 4.1 | 4 |
| O200E4S | 6.4 | 7.1 | 6.8 |
| O250E4S | 6.4 | 7.1 | 6.8 |
| O280E4S | 8.4 | 9.1 | 8.7 |
| O300E4S | 8.4 | 9.1 | 8.7 |
| O350E4S | 8.4 | 9.1 | 8.7 |
| O400E4S | 8.4 | 9.1 | 8.7 |
| O450E4S | 12.3 | 13.4 | 12.9 |
| O500E4S | 12.3 | 13.4 | 12.9 |
| O600E4S | 12.3 | 13.4 | 12.9 |
| O100L4S | 2.1 | 2.3 | 2.2 |
| O130L4S | 2.1 | 2.3 | 2.2 |
| O160L4S | 2.1 | 2.3 | 2.2 |
| O230L4S | 3.8 | 4.1 | 4 |
| O250L4S | 6.4 | 7.1 | 6.8 |
| O300L4S | 6.4 | 7.1 | 6.8 |
| O350L4S | 6.4 | 7.1 | 6.8 |
| O400L4S | 8.4 | 9.1 | 8.7 |
| O500L4S | 8.4 | 9.1 | 8.7 |
| O600L4S | 8.4 | 9.1 | 8.7 |
| H055E4S | 2.1 | 2.3 | 2.2 |
| H080E4S | 2.1 | 2.3 | 2.2 |
| H100E4S | 2.1 | 2.3 | 2.2 |
| H125E4S | 3.8 | 4.1 | 4 |

## POUNDS OF ADDITIONAL REFRIGERANT CHARGE TO ADD FOR FLOODED HEAD PRESSURE CONTROLS

| Next-Gen II 3 to 22 HP Condensing Units | | | | |
|---|---|---|---|---|
| Model | Lbs. to Add | | | |
| | R404A | R407A | R448A/ R449A | R454A/ R454C/ R455A |
| BS03E4 | 8.4 | 9.2 | 8.8 | 11.1 |
| OS04E4 | 8.4 | 9.2 | 8.8 | 11.1 |
| OS05E4 | 8.4 | 9.2 | 8.8 | 11.1 |
| DS04M4 | 8.4 | 9.2 | 8.8 | 11.1 |
| BS04E4 | 8.4 | 9.2 | 8.8 | 11.1 |
| OS06E4 | 8.4 | 9.2 | 8.8 | 11.1 |
| BS05E4 | 8.4 | 9.2 | 8.8 | 11.1 |
| DS05M4 | 8.4 | 9.2 | 8.8 | 11.1 |
| OS07E4 | 21.0 | 22.9 | 22.0 | 20.9 |
| BS06E4 | 21.0 | 22.9 | 22.0 | 20.9 |
| DS06M4 | 21.0 | 22.9 | 22.0 | 20.9 |
| OS08E4 | 21.0 | 22.9 | 22.0 | 20.9 |
| BS07E4 | 21.0 | 22.9 | 22.0 | 20.9 |
| DS07M4 | 21.0 | 22.9 | 22.0 | 20.9 |
| OS09E4 | 21.0 | 22.9 | 22.0 | 20.9 |
| DS08M4 | 21.0 | 22.9 | 22.0 | 20.9 |
| BS08E4 | 21.0 | 22.9 | 22.0 | 20.9 |
| OS10E4 | 21.0 | 22.9 | 22.0 | 20.9 |
| DS10M4 | 21.0 | 22.9 | 22.0 | 20.9 |
| BS10E4 | 21.0 | 22.9 | 22.0 | 20.9 |
| OS13E4 | 26.2 | 28.6 | 27.4 | 26.0 |
| BS12E4 | 26.2 | 28.6 | 27.4 | 26.0 |
| DS12M4 | 26.2 | 28.6 | 27.4 | 26.0 |
| OS15E4 | 26.2 | 28.6 | 27.4 | 26.0 |
| DS15M4 | 26.2 | 28.6 | 27.4 | 26.0 |
| BS15E4 | 26.2 | 28.6 | 27.4 | 26.0 |
| BS03L4 | 8.4 | 9.2 | 8.8 | 8.3 |
| DS03L4 | 8.4 | 9.2 | 8.8 | 8.3 |
| BS04L4 | 8.4 | 9.2 | 8.8 | 8.3 |

| Next-Gen II 3 to 22 HP Condensing Units CONT. | | | | |
|---|---|---|---|---|
| Model | Lbs. to Add | | | |
| | R404A | R407A | R448A/ R449A | R454A/ R454C/ R455A |
| DS04L4 | 8.4 | 9.2 | 8.8 | 8.3 |
| BS05L4 | 8.4 | 9.2 | 8.8 | 8.3 |
| DS05L4 | 8.4 | 9.2 | 8.8 | 8.3 |
| OS08L4 | 8.4 | 9.2 | 8.8 | 8.3 |
| BS06L4 | 8.4 | 9.2 | 8.8 | 8.3 |
| DS06L4 | 15.8 | 17.2 | 16.5 | 15.6 |
| OS10L4 | 15.8 | 17.2 | 16.5 | 15.6 |
| BS08L4 | 15.8 | 17.2 | 16.5 | 15.6 |
| DS08L4 | 15.8 | 17.2 | 16.5 | 15.6 |
| BS09L4 | 15.8 | 17.2 | 16.5 | 15.6 |
| OS13L4 | 15.8 | 17.2 | 16.5 | 15.6 |
| DS09L4 | 15.8 | 17.2 | 16.5 | 15.6 |
| BS10L4 | 15.8 | 17.2 | 16.5 | 15.6 |
| DS10L4 | 15.8 | 17.2 | 16.5 | 15.6 |
| OS15L4 | 15.8 | 17.2 | 16.5 | 15.6 |
| DS12L4 | 15.8 | 17.2 | 16.5 | 15.6 |
| BS12L4 | 15.8 | 17.2 | 16.5 | 15.6 |
| DS15L4 | 15.8 | 17.2 | 16.5 | 15.6 |
| BS15L4 | 15.8 | 17.2 | 16.5 | 15.6 |
| DS22L4 | 25.9 | 28.2 | 27.0 | 25.6 |
| BS22L4 | 25.9 | 28.2 | 27.0 | 25.6 |

## POUNDS OF ADDITIONAL REFRIGERANT CHARGE TO ADD FOR FLOODED HEAD PRESSURE CONTROLS

| QV-Series 15 to 100 HP Condensing Units | | | | |
|---|---|---|---|---|
| Model | Lbs. to Add | | | |
| | R404A | R407A | R448A/ R449A | R454A/ R454C/ R455A |
| 15M | 27.3 | 29.7 | 28.5 | 27.1 |
| 20M | 38.9 | 42.4 | 40.7 | 38.6 |
| 25M | 38.9 | 42.4 | 40.7 | 38.6 |
| 30M | 50.6 | 55.1 | 52.8 | 50.1 |
| 35M | 56.0 | 61.0 | 58.5 | 55.5 |
| 40M | 56.0 | 61.0 | 58.5 | 55.5 |
| 50M | 73.3 | 79.9 | 76.6 | 72.7 |
| 22L | 27.3 | 29.8 | 28.6 | 27.1 |
| 27L | 38.9 | 42.5 | 40.7 | 38.6 |
| 30L | 38.9 | 42.5 | 40.7 | 38.6 |
| 40L | 50.6 | 55.1 | 52.8 | 50.1 |
| **Dual Lbs. to Add** | | | | |
| 30M | 27.3 | 29.7 | 28.5 | 27.1 |
| 40M | 38.9 | 42.4 | 40.7 | 38.6 |
| 50M | 38.9 | 42.4 | 40.7 | 38.6 |
| 60M | 50.6 | 55.1 | 52.8 | 50.1 |
| 70M | 56.0 | 61.0 | 58.5 | 55.5 |
| 80M | 56.0 | 61.0 | 58.5 | 55.5 |
| 100M | 73.3 | 79.9 | 76.6 | 72.7 |
| 44L | 27.3 | 29.8 | 28.6 | 27.1 |
| 54L | 38.9 | 42.5 | 40.7 | 38.6 |
| 60L | 38.9 | 42.5 | 40.7 | 38.6 |
| 80L | 50.6 | 55.1 | 52.8 | 50.1 |
| **Parallel Lbs. to Add** | | | | |
| 50M | 77.9 | 84.8 | 81.3 | 77.1 |
| 60M | 101.1 | 110.1 | 105.6 | 100.2 |
| 70M | 112.1 | 122.0 | 117.0 | 111.0 |
| 80M | 112.1 | 122.0 | 117.0 | 111.0 |
| 100M | 146.6 | 159.8 | 153.2 | 145.4 |
| 44L | 54.6 | 59.6 | 57.2 | 54.2 |
| 54L | 77.9 | 84.9 | 81.3 | 77.3 |
| 60L | 77.9 | 84.9 | 81.3 | 77.3 |
| 80L | 101.1 | 110.1 | 105.6 | 100.2 |

## QV SERIES MINIMUM CHARGE MONITOR FOR NON-FLOODED CONDENSER MODELS

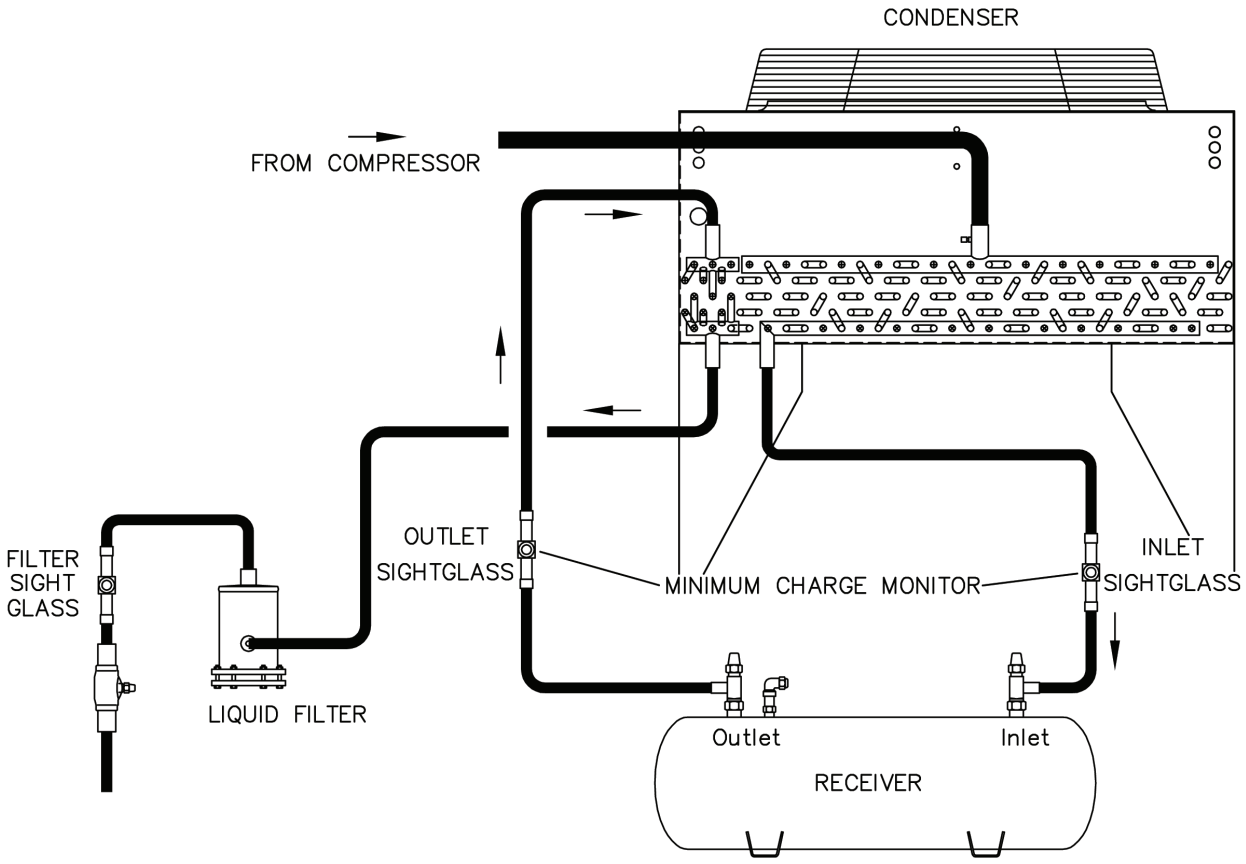


| | NORMAL | LOW ON CHARGE | RESTRICTED FILTER | OVER CHARGE |
|---|---|---|---|---|
| INLET SIGHTGLASS | BUBBLES | BUBBLES | CLEAR | CLEAR |
| OUTLET SIGHTGLASS | CLEAR | BUBBLES | CLEAR | CLEAR |
| FILTER SIGHTGLASS | CLEAR | CLEAR OR BUBBLES | BUBBLES | CLEAR |

Use the status of each sight glass and the table to determine proper charge.

# GENERAL REPAIRS

Service shall be performed only as recommended:

- Work shall be undertaken under a controlled procedure so as to minimize the risk of a flammable gas or vapor being present while the work is being performed.
- All maintenance staff and others working in the local area shall be instructed on the nature of work being carried out. Work in confined spaces shall be avoided.
- The area shall be checked with an appropriate refrigerant detector prior to and during work, to ensure the technician is aware of potentially toxic or flammable atmospheres.
- Ensure that the leak detection equipment being used is suitable for use with all applicable refrigerants, i.e., non-sparking, adequately sealed, or intrinsically safe.
- If any hot work is to be conducted on the refrigerating equipment or any associated parts, appropriate fire extinguishing equipment shall be available on hand. A dry chemical or CO2 fire extinguisher should be adjacent to the charging area.
- No person carrying out work in relation to a refrigeration system which involves exposing any pipe work shall use any sources of ignition in such a manner that it may lead to the risk of fire or explosion. All possible potential ignition sources, including cigarette smoking, should be kept sufficiently far away from the site of installation, repairing, removing and disposal, during which refrigerant can possibly be released to the surrounding space. Prior to work taking place, the area around the equipment shall be surveyed to make sure that there are no flammable hazards or ignition risks. “No Smoking” signs shall be displayed."
- Ensure that the area is in the open or that it is adequately ventilated before breaking into the system or conducting any hot work. A degree of ventilation shall continue during the period that the work is carried out. The ventilation should safely disperse any released refrigerant and preferably expel it externally into the atmosphere.
- Where electrical components are being changed, they shall be fit for the purpose and of the correct specification. At all times, the manufacturer's maintenance and service guidelines shall be followed. If in doubt, consult the manufacturer's technical department for assistance.
- The following checks shall be applied to installations using FLAMMABLE REFRIGERANTS:
  a. The actual REFRIGERANT CHARGE is in accordance with the room size within which the refrigerant containing parts are installed.
  b. The ventilation machinery and outlets are operating adequately and are not obstructed.
  c. If an indirect refrigerating circuit is being used, the secondary circuit shall be checked for the presence of refrigerant.
  d. Marking to the equipment continues to be visible and legible. Markings and signs that are illegible shall be corrected.
  e. Refrigerating pipes or components are installed in a position where they are unlikely to be exposed to any substance which may corrode refrigerant containing components, unless the components are constructed of materials which are inherently resistant to being corroded or are suitably protected against being so corroded.
- Repair and maintenance to electrical components shall include initial safety checks and component inspection procedures.
  - If a fault exists that could compromise safety, then no electrical supply shall be connected to the circuit until it is satisfactorily dealt with.
  - If the fault cannot be corrected immediately but it is necessary to continue operation, an adequate temporary solution shall be used.
  - This shall be reported to the owner of the equipment, so all parties are advised.

# GENERAL REPAIRS

Initial safety checks shall include:

1. The capacitors are discharged: this shall be done in a safe manner to avoid possibility of sparking.
2. That no live electrical components and wiring are exposed while charging, recovering or purging the system.
3. That there is continuity of earth bonding.
4. During repairs to sealed components, all electrical supplies shall be disconnected from the equipment being worked upon prior to any removal of sealed covers, etc. If it is absolutely necessary to have an electrical supply to equipment during service, then a permanently operating form of leak detection shall be located at the most critical point to warn of a potentially hazardous situation.
5. Particular attention shall be paid to the following to ensure that by working on electrical components, the casing is not altered in such a way that the level of protection is affected.

   This shall include:
   - damage to cables
   - excessive number of connections
   - terminals not made to original specification
   - damage to seals
   - incorrect fitting of strain relief devices, etc.
6. Ensure that the apparatus is mounted securely.
7. Ensure that seals or sealing materials have not degraded to the point that they no longer serve the purpose of preventing the ingress of flammable atmospheres.
8. Replacement parts shall be in accordance with the manufacturer's specifications.
   - Do not apply any permanent inductive or capacitance loads to the circuit without ensuring that this will not exceed the permissible voltage and current permitted for the equipment in use.
   - Intrinsically safe components are the only types that can be worked on while live in the presence of a flammable atmosphere.
   - The test apparatus shall be at the correct rating.
   - Replace components only with parts specified by the manufacturer. Other parts can result in the ignition of refrigerant in the atmosphere from a leak.
   - NOTE: The use of silicon sealants can inhibit the effectiveness of some types of leak detection equipment. Intrinsically safe components do not have to be isolated prior to working on them.
9. Check that cabling will not be subject to wear, corrosion, excessive pressure, vibration, sharp edges, or any other adverse environmental effects. The check shall also consider the effects of aging or continual vibration from sources such as compressors or fans.

Table 6

RECOMMENDED INITIAL ADJUSTABLE LOW PRESSURE CONTROL SETTING - PSIG

| Minimum System* Temp. °F | R404A | | R455A/R448A/ R449A/R407A | | R454A | | R454C | |
|---|---|---|---|---|---|---|---|---|
| | Max. Cut In | Cut Out | Max. Cut In | Cut Out | Max. Cut In | Cut Out | Max. Cut In | Cut Out |
| 50 | 85 | 35 | 65 | 22 | 74 | 26 | 60 | 22 |
| 40 | 70 | 35 | 50 | 22 | 59 | 26 | 47 | 22 |
| 30 | 55 | 35 | 38 | 22 | 47 | 26 | 36 | 22 |
| 20 | 50 | 30 | 34 | 18 | 39 | 23 | 32 | 18 |
| 10 | 45 | 25 | 30 | 14 | 34 | 18 | 26 | 14 |
| 0 | 25 | 5 | 16 | 3" VAC | 19 | 2 | 14 | 0 |
| -10 | 20 | 1 | 10 | 4" VAC | 12 | 0 | 8 | 4" VAC |
| -20 | 12 | 1 | 3 | 4" VAC | 7 | 0 | 3 | 4" VAC |
| -30 | 8 | 0 | 1 | 4" VAC | 4 | 0 | 0 | 4" VAC |

* Minimum System Temperature is the coldest point in the system, whether it is the outdoor ambient or the refrigerated room temperature. The Minimum System Temperature dictates the low pressure control setting. When possible, keep the low pressure cut out at positive pressure. Low pressure controls are factory set at 15 PSI cut in and 3 PSI cut out. For other approved refrigerants, consult factory.

Table 7

RECOMMENDED INITIAL ADJUSTABLE HIGH PRESSURE CONTROL SETTING - PSIG

| R404A, R407A, R448A, R449A, R454A, R454C, R455A | | |
|---|---|---|
| **Model** | **Cut In** | **Cut Out** |
| Next-Gen, 1/2 to 6HP 450 PSIG high side | 330-350 | 440-450 |
| Next-Gen II, 3 to 22 HP with 400 PSIG high side | 315-320 | 390-400 |
| QV-Series, 15 to 100 HP with 400 PSIG high side | 315-320 | 390-400 |

Table 8

RECOMMENDED MINIMUM MACHINE ROOM VENTILATION

| SATURATED SUCTION °F | CFM PER HORSEPOWER |
|---|---|
| High Temp. +28 to +45 | 2,000 |
| Med. Temp. +1 to +27 | 1,500 |
| Low temp. -1 to -30 | 1,000 |

These estimates are based on limiting the equipment room ventilation air temperature rise to 10°F above the make up air. The total fresh air CFM must be available to the condenser coil inlets at design ambient. The temperature rise may be reduced by increasing the ventilation CFM.

High temperature CFM required = HT HP x 2000 = _____

Med. temperature CFM required = MT HP x 2000 = _____

Low temperature CFM required = LT HP x 1000 = _____

TOTAL estimated CFM required = (add above) _____

Table 9

RECOMMENDED FAN CYCLE SETTINGS

| Next-Gen, 1/2 to 6HP | | |
|---|---|---|
| **Fan** | **Cut In** | **Cut Out** |
| 1st | 155 PSIG | 120 PSIG |
| 2nd | 155 PSIG | 120 PSIG |

| Next-Gen II, 3 to 22 HP | | |
|---|---|---|
| **Fan** | **Cut In** | **Cut Out** |
| 1st | 155 PSIG | 120 PSIG |
| 2nd | 50ºF | 45ºF |

# DEFROST OPERATION

AIR DEFROST - An air defrost system, sometimes called off-cycle, is wired so that the evaporator fans run continuously, unless manually de-energized. Whenever the compressor stops, the room air (minimum = 34°F) warms the coils to room temperature melting the frost. It is essential that the frost completely melts and drains each time the compressor cycles off. If it does not, a partial defrost results, and the residual water and slush will re-freeze into ice during the next run cycle. Ice removal will require a manual defrost.

Adequate off-cycle time is a function of system capacity. If the system is too small for the room, ice build-up will usually result. Use of an air defrost timer is sometimes successful on undersized systems to avoid coil icing. A temporary rise in room temperature will occur during the defrost cycle.

Optional defrost timers are suitable for Time Initiated, and either Time or Temperature terminated air defrost. Time termination is done by setting the fail-safe dial of the timer to the desired defrost duration. This keeps the compressor off during that duration. Temperature termination requires the mounting of a close-on-rise termination thermostat whose remote sensing bulb can be affixed to the coil at the point of heaviest frosting. The best setting for the termination temperature is usually the design room temperature.

ELECTRIC DEFROST - The recommended electric defrost circuitry is typical wiring designed for the Paragon 8145-20 and Grasslin DTSX defrost timers, with the addition of Lock-out Relay R1. This relay prevents the simultaneous operation of the compressor and the defrost heaters, and thus avoids the need for oversized wiring and service.

Relay R1 contact (4-5) is normally closed (relay de-energized), and is wired in series with the defrost heaters and terminal 3 (heater power) in the timer. Whenever R1 is energized, the relay contact opens, breaking the heater power circuit. R1 holding coil is in parallel with the compressor motor on single phase, or the compressor contactor holding coil (M1) on three phase, and is therefore energized any time the compressor starts. When the timer switches the system into defrost, the heaters will not energize until the compressor completes pumpdown and stops, even through the timer has applied power to terminal 3. If the compressor starts up for additional pumpdown during defrost, R1 energizes, breaking power to the heaters until the compressor stops again.

TIMER SETTING - Timers should be set to the correct time. Determine the number of defrost per day and the best time of day to occur. Insert defrost pins accordingly. Set the fail-safe time to terminate the defrost a few minutes beyond the estimated temperature termination time. Air defrost fail-safe (termination time) is usually 30 to 50 minutes. The colder the room, the longer the fail-safe time required. Electric defrost systems normally have a 25 to 35 minute fail-safe time. Hot gas defrost systems usually have a 15 minute fail-safe.

SUCCESSFUL DEFROSTING - Numerous factors should be considered when selecting and starting up low temperature refrigeration systems. For storage freezers holding packaged product, two defrost per day is normal. If the freezer has heavy usage with lots of door openings then three or four defrost per day may be required. For blast chilling and freezing or freezing of products with high moisture content, six or more defrost per day may be necessary. Do not have more defrosts than are necessary. Unnecessary extra defrosts add heat to the refrigerated space that must be removed. Excessive defrost periods may also cause steaming and lead to undesirable ice formation on the unit cooler, ceiling, and product.

Another factor to consider when determining the frequency of defrost is oil return. Oil will tend to settle out in the evaporator or suction line on low temperature systems. This oil should return to the compressor shortly after a defrost. Watch the compressor oil level. If it becomes low, a defrost may be needed for oil return. In critical situ-

ations an oil separator may be required. Two to four defrost per day are usually sufficient to maintain proper oil level in the compressor. Synthetic (POE) lubricants are considered more miscible with refrigerants than mineral oil and do not separate out as rapidly. Some installations may require only one defrost per day.

Evaporators with a medium frost load will defrost best. If the frost load is very light, the moisture cannot form water drops and run off the fins. Instead, it will vaporize off as steam and can create ice on colder surfaces like the ceiling, fan blades, fan guards, and evaporator housing. With medium frost loads, the frost will melt off as water and drain away. Too heavy a frost load will restrict air flow and cause uneven temperature in the freezer. Defrost with a medium frost load to maintain stable room temperature, optimum evaporator performance, and have a complete clearing of all frost.

Once ice forms in an evaporator coil it keeps building more ice and eventually will lead to equipment failure if not manually defrosted. Some symptoms of ice forming in the coil are: (1) Loss of air circulation and air throw, (2) Loss of room temperature, (3) No off-cycle time, (4) Floodback, and (5) Water spitting out of the fans or coil on air defrost systems. Long term ice formation will crush the refrigerant tubes in the coil causing leaks and major equipment problems. If ice formation is suspected, carefully check the interior rows of the coil with a good light. Ice formation usually starts at the bottom of the coil in the middle rows and can be difficult to detect. Any ice formation, however small, requires a manually assisted defrost. Clear 100% of the ice before placing a unit back into operation.

# LOW AMBIENT HEAD PRESSURE CONTROL

Low ambient head pressure control on air cooled condensing units, commonly referred to in most HTPG literature as “Flooded Head Pressure Control” or “Flood” consists of the following variations:

- Single (or Dual), Non-Adjustable Valve(s)
- (1) Adjustable & (1 or 2) Non-Adjustable Valves
- (2) Adjustable Valves

Regardless of the type of valve used, they all function to maintain a minimum system head pressure during periods of low outdoor ambient temperature by backflooding a portion (up to a maximum of 90%) of the total internal volume of the condenser coil. For the valve(s) to function correctly the system must be properly charged with refrigerant, considering both the normal “summer” operating charge as well as the additional “flood” charge which is required for satisfactory winter operation. The summer and winter charge (in addition to the field liquid line and evaporator working charge) constitute the year-round system operating charge.

During warmer outdoor ambient temperatures the “winter” or “flood” charge is simply stored in the liquid receiver where it has no impact on the system head pressure but is available to backflood the condenser whenever the outdoor ambient temperature drops significantly below the set point of the valve.

Non-adjustable valves, which are typically used on smaller HP units (Reference Figure 1), are exactly as the name implies – there is no physical means of adjusting the operating setpoint of the valve in the field. If a system has been charged with the correct amount of refrigerant (refer to HTPG - Systems IOM), then the valve will maintain a minimum head pressure year-round, regardless of the outdoor ambient temperature (within normal system design limitations). Currently all HTPG DOE listed condensing units utilize non-adjustable valves which are fixed at +70 SCT.

This equates to a minimum, year-round head pressure of approx. 154 PSIG using refrigerant R-448A or approx. 150 PSIG using refrigerant R-404A. On multi-circuit compressor rack applications the typical head pressure control valves used are designed to maintain a minimum of +90° SCT, 210 PSIG using R-448A or 205 PSIG using R-404A. Although the addition of condenser fan cycling control to any condensing unit will effectively reduce the amount of additional refrigerant required to backflood the condenser, the flood valve will always be the primary means of low ambient head pressure control.

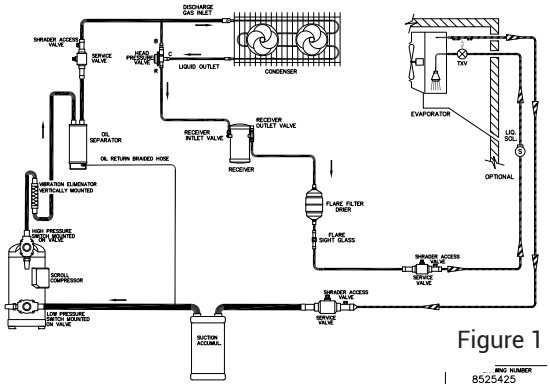

Figure 1

Due to capacity limitations with non-adjustable valves, larger HP single or parallel compressor units may use (2) non-adjustable valves piped in parallel to maintain sufficient refrigerant flow, or a combination of adjustable and nonadjustable valves to accommodate the larger unit capacity (Reference Figure 2). Some large HP units may utilize (2) adjustable valves. Adjustable valves ARE NOT PRE-SET AT THE FACTORY, so even though a system may be properly charged in the field it is still necessary to check the operating head pressure and adjust each valve (if required) to maintain minimum system head pressure.

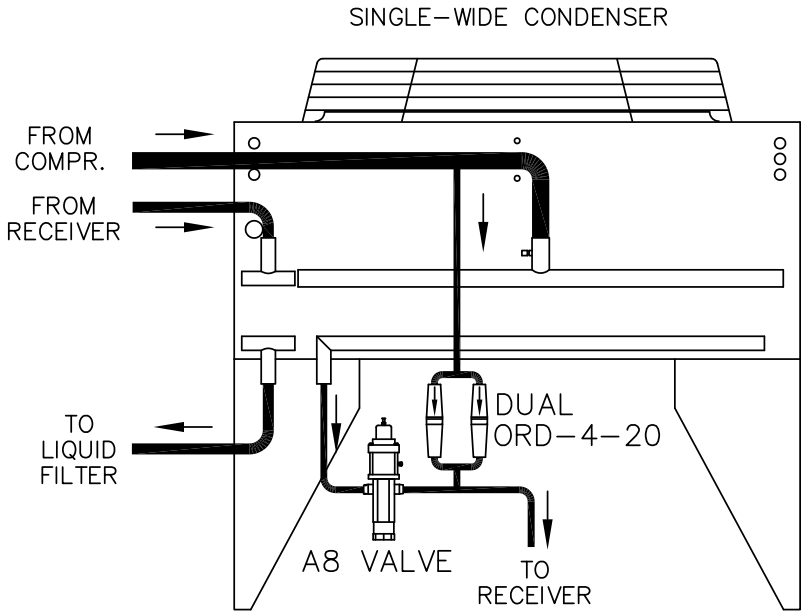


Figure 2

On applications using a combination of adjustable and non-adjustable valves, the adjustable valve is normally referred to as an "Inlet Regulator" and is physically mounted in the factory piping between the condenser outlet and the receiver inlet connection. The second valve used in this application is typically referred to as a "Differential Valve" and is physically mounted in the factory piped hot gas line located between the condenser inlet and the line between the inlet regulator outlet and receiver inlet.

## Basic Valve Models Used

- Non-Adjustable Regulator; Parker (Sporlan) LAC / OROA
- Adjustable Inlet Regulator; Parker (Sporlan) LAC, ORI or A8*
- Non-Adjustable Differential Valve; Parker (Sporlan) ORD
- Adjustable Outlet / Differential Regulator; Parker A8*O

NOTE: * designates different valve body sizes.

## Operation

When the operating head pressure drops below the set point of the valve, the inlet regulator begins to close, restricting the flow of refrigerant leaving the condenser, causing liquid to backup into or "flood" the coil tubes. Filling the tubes with liquid reduces the amount of primary surface available for useful condensing so head pressure goes up. This liquid also causes the total pressure drop across the coil to increase. With the increased pressure drop, the fixed differential (or adjustable outlet regulator) begins to open, causing hot discharge gas to bypass around the condenser directly to the receiver. In the non-adjustable, single valve configuration both regulator and differential valves are combined in a single valve body. The two valve components work together

to maintain a balanced flow of liquid and hot gas, at the proper pressure, to the liquid stored in the receiver. This ensures that 100% bubble free liquid is continuously available to all system metering devices. As the outdoor temperature drops, the inlet regulator will continue to close, backflooding even more of the condenser tubes, further reducing condenser capacity to maintain the valve set point.

If the system is undercharged due to a refrigerant leak, or the installer failed to add the proper amount for the winter or "flood" charge at time of original start up, the receiver may run dry of liquid, resulting in low head pressure and only hot gas / vapor being sent to the system metering devices. Understanding how the head pressure control valves function and the importance of the additional "flood" or winter charge is critical to properly service and troubleshoot the system operation.

## Valve Adjustment

Standard field service procedure would be to adjust the inlet regulator (ORI or A8 valve) when the outdoor ambient temperature drops well below the minimum design saturated condensing temperature. This would be below +60° (approx.) on systems where the minimum head pressure will be maintained at +70° SCT or below +75° (approx.) on systems designed to maintain a minimum of +90° SCT. If any condenser fan cycling or variable speed fan control is utilized on the unit, force all fans to run at 100% RPM.

Note: It is extremely important that any fan cycling controls utilized in conjunction with flooded head pressure control do not "fight" the valves, causing instability in the system operating head pressure.. For this reason, it is generally not recommended to use pressure fan cycling controls on units with flooded head pressure controls. If there is a need to reduce fan energy or system charge requirements during low ambient temperatures then temperature activated fan cycling control is always preferred.

On the ORI valve, remove the knurled brass cap, exposing the hex head adjustment screw inside the valve body. With a high side gauge attached to the compressor discharge valve and another connected at the receiver, turn the hex head adjustment screw in (clockwise) to increase inlet pressure or out (counter- clockwise) to decrease pressure (Reference Figure 3). Make only small adjustments each time and allow the system to settle out before making further adjustments.



Figure 3

On the A8 valve, loosen the lock nut on the top dome of the valve approx. ¼ turn and using an adjustable wrench, turn the adjustment screw in (clockwise) to increase inlet pressure or out (counterclockwise) to decrease inlet pressure (Reference Figure 4). A full turn of the adjustment screw will change the pressure setting up or down approx. 20 PSI.




Clockwise (IN) - Increase Press




Counterclockwise (IN) - Decrease Press

Figure 4

Note: On larger HP systems using an adjustable Outlet Regulator in place of a non-adjustable Differential Regulator, adjust this valve at the same time as the Inlet Regulator using the same procedure as referenced above for the A8 valve. This valve should be adjusted to begin opening at approx. 20 PSI below the high side pressure measured at the compressor discharge valve. Adjust the Inlet Regulator first, then the Outlet Regulator – again making only small adjustments each time so as not to overshoot the targeted system pressures. Be sure to re-tighten the lock nut and replace all valve caps after final adjustment. Restore any condenser fan controls to their normal operation.

# PRODUCT LOADING AND AIR CIRCULATION

Always allow space for good air throw, air circulation, air return, cleaning and servicing of the evaporator unit. Always leave air circulation space between the products and walls of the cooler. Leave space between the boxes or cartons of product for the fastest temperature reduction or freezing. The larger the mass of product, the longer it takes to remove heat from the center of that mass.

Divide the mass with air circulation space so the circulating cold air can carry the heat away from the product faster. Baffles may be required to direct air to specific areas of a room. How the product is stacked will influence pulldown time and stable product temperature. Direct the air to flow over and through the product. Refer to the evaporator location recommendations in section labeled **LOCATING WALK-IN EVAPORATORS**. It is a good practice to avoid stacking product closer than 12 inches to the evaporator drain pan. The room size, layout, aisle ways, heigh, door location, product stacking, and other factors influence the location of the evaporator. Locate evaporators so that the air pattern covers the entire room. Avoid placing evaporators above or close to doors. Direct the air stream toward the door or down an aisle when possible. Use strip curtains on doors if they are open frequently or for extended periods. Minimize the entry of warm, humid, air into the room.

There are always exceptions to the guidelines for general use storage cooler or freezers. Special exceptions could be the product, air velocity, temperature, humidity, process, people, or machinery involved.

Tomatoes, bananas, flowers, meat cutting and processing, and many other products have special requirements. Work or process rooms with people involved also have specifications requiring special attention. Facilities with USDA or other inspections can have special regulations and we suggest contacting the local inspector when selecting and locating equipment. Blast chill or blast freeze rooms may require special equipment or parts. We have years of experience and are always ready to assist you with special applications or projects.

Drawing 9

TYPICAL EVAPORATOR LOCATION IN A FREEZER

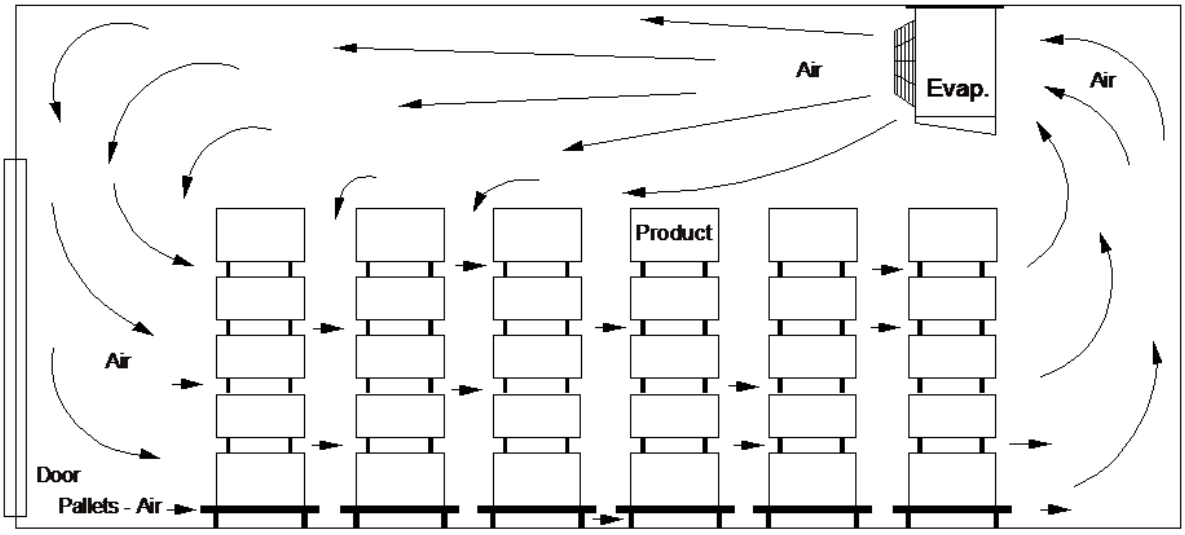

## Evaporator Superheat

Low and medium temperature systems will usually operate more efficiently with a superheat setting of 6ºF at design room temperature (always maintain a 20°F compressor superheat). Obtain evaporator superheat by measuring the suction line temperature at the expansion valve bulb.

Obtain pressure at a Schrader fitting in the evaporator suction connection area, near the expansion valve bulb, and convert to dew point temperature with a pressure-temperature chart. Subtract the converted temperature from the measured temperature and the difference is superheat at the evaporator. Obtain the desired superheat by adjusting the expansion valve. Evaporator superheat greater than 14°F can substantially reduce the evaporator and system capacity, while superheat less than 4°F has the potential for floodback.

## Compressor Superheat

To improve compressor life expectancy 25° to 40° of compressor superheat is preferred. Copeland recommends a MINIMUM of 20°F superheat at the compressor. Compressor superheat is sometimes called suction superheat. Obtain compressor super-heat by measuring the suction line temperature about 6 to 12 inches from the compressor service valve. Obtain pressure at the suction service valve and convert to dew temperature with a pressure-temperature chart. Subtract the converted dew temperature from the measured temperature and the difference is superheat at the compressor.

Compressor superheat is a critical value and should override evaporator superheat. Too low a compressor superheat can permit liquid return to the compressor causing damage or failure. Too high a compressor superheat can cause high discharge temperature, resulting in lubricant breakdown, compressor overheating and can lead to compressor damage or failure.

System capacity decreases as compressor superheat increases so superheat should be as low as practical, but with 20°F MINIMUM at all times. Compressor superheat can be charged by adjusting the expansion valve, adding a suction-liquid line heat exchanger, or by insulating just the suction line. Remember that increasing the superheat at the evaporator will decrease the evaporator capacity. For that reason, suction-liquid line heat exchanger are often used on systems with short line runs. Each system must be thoughtfully planned and adjusted to obtain optimum performance.

Maximum superheats must be observed with extended range models.

## Return Gas Temperature

Although compressors may be capacity rated with 65°F return gas, most low temperature systems should not be operated at that condition. A 65°F return gas is usually acceptable on medium temperature systems. We recommend a 20°F to 40°F maximum return gas temperature on low temperature systems. Higher return gas temperatures on low temperature systems may cause compressor overheating and shorten compressor life. Always maintain a minimum 20°F superheat at the compressor.

If necessary, insulate the suction line on low temperature systems to improve the return gas temperature and superheat at the compressor. Always observe maximum return gas temperatures noted in the product literature.

## Discharge Line Temperature

The discharge line temperature should be measured about 6 inches down line from the compressor discharge service valve. Discharge line temperature has a direct relationship to internal temperatures in the compressor. A discharge line temperature of 220°F or lower is desirable and will improve compressor life expectancy. Maintaining a discharge line temperature below 220°F prevent oil breakdown, prevents excess wear on internal parts, and is assurance that the compressor is not overheating. Copeland recommends a MAXIMUM discharge line temperature of 225°F. "Lower is better".

There is a relationship between discharge line temperature and return gas temperature. Lowering the return gas temperature by insulating the suction line will usually lower the discharge line temperature about the same degree. Make sure low temperature compressor have a direct air blast over the compressor body. This air blast is essential to maintain proper cooling of low temperature compressors. Check head cooling fans for operation.

An operational check and adjustment is recommended after the room has pulled down to operating temperature and the outdoor ambient is above 70°F. To simulate design conditions, the condenser face can be partially blocked (Do not block condenser air blast cooling compressor body) to raise the head pressure. Carefully adjust each system for optimum performance and trouble free long life.

# SCROLL COMPRESSOR OPERATION

## Liquid Injection

The low temperature scroll compressor is provided with an injection port suitable for connection to a source of liquid refrigerant. Internally, this port is connected to an inner pocket of the scroll mechanism. Since this pocket is separated from the suction inlet, no loss of capacity or mass flow results from injecting at this point.

## Discharge Temperature Control

Copland's low temperature scroll compressors utilize a DTC valve to meter liquid injection based on discharge temperature. The DTC is designed to work with blended 400 series refrigerants such as R404A, R407A, R448A, R449A, R454A, R454C, and R455A.

## IPV Valve

Refrigeration scroll compressors (up to 9 HP size) may have internal pressure relief valves which open at a discharge to suction differential pressure of 375 to 450 psi. This action will trip the motor protector and remove the motor from the line.

## Starting Characteristics

Single phase scrolls are designed with PSC type motors and therefore will start without the need of start assist devices in most applications. However, if low voltage conditions exist at start-up, protector trips can result. Therefore start assist devices (start capacitors & relays) are available to maximize starting characteristics under abnormal conditions.

## Brief Power Interruptions

Brief power interruptions (less than 1/2 second) may result in powered reverse rotation of single phase Copeland Scroll compressors. High pressure discharge gas expands backwards through the scrolls at power interruption, causing the scroll to orbit in the reverse direction. If power is re-applied while this reversal is occurring, the compressor may continue to run noisily in the reverse direction for several minutes until the compressor's internal protector trips. This has no negative impact on durability. When the protector resets the compressor will start and run normally.

## Three Phase Scroll Compressors - Directional Dependence

Scroll compressors are directional dependent; i.e. they will compress in one rotational direction only. Three phase scrolls will rotate in either direction depending on power phasing. Since there is a 50/50 chance of connected power being “backwards", contractors should be warned of this. Appropriate instructions or notices should be provided by the OEM. Verification of proper rotation can be made by observing that the suction pressure drops and the discharge pressure rises when the compressor is energized.

# TROUBLESHOOTING

| Problem | Possible Causes | Possible Corrective Action |
|---|---|---|
| Compressor Will Not Run | 1. Fused disconnect switch or circuit breaker open. | 1. Close switch and / or breaker. |
| | 2. Blown fuse or tripped breaker. | 2. Check for reason and repair. Replace fuse after correcting problem. |
| | 3. Low line voltage. | 3. Check line voltage; if more than 10% from compressor marking, correcting is necessary. |
| | 4. Compressor motor protector open. | 4. Motor protector automatically resets. Allow time for compressor to cool down so protector will reset. Restart and check for reason overheat occurred. |
| | 5. Defective compressor contactor. | 5. Replace contactor. |
| | 6. Open room thermostat. | 6. Check room temperature. If temperature is proper, wait for thermostat to close. |
| | 7. Open low pressure control. | 7. Check low pressure control settings. See page 20 for initial settings and adjust as required. |
| | 8. Open defrost timer. | 8. Check defrost timer for proper operation. Replace if defective. |
| | 9. Open oil failure switch. | 9. Check for causes of low pressure and reset switch. |
| | 10. Liquid line solenoid will not open. | 10. Check holding coil; replace if defective. |
| | 11. Compressor motor defective. | 11. Check motor for open circuit, short-circuit, grounded windings or burn-out. |
| | 12. Loose wiring. | 12. Check all wire terminals and tighten as necessary. |
| | 13.Open high pressure switch. | 13. Check for causes of high pressure and reset switch. |
| | 14. The leak sensor has closed the refrigerant valve and caused a pump-down. | 14. Check for a repair leak. Cycle the power to reset the leak sensor. |
| Compressor Noisy or Vibrating | 1. Flooding of liquid refrigerant into crankcase. | 1. Check expansion valve superheat setting. |
| | 2. Compressor hold-down nuts too tight. | 2. Loosen compressor hold-down nuts until compressor floats freely on mounting springs. |
| | 3. Scroll compressor rotation sensitive. | 3. Rewire for reverse rotation. |
| | 4. Worn or damaged compressor. | 4. Replace the compressor. |

# TROUBLESHOOTING

| Problem | Possible Causes | Possible Corrective Action |
|---|---|---|
| High Head Pressure | 1. Too much refrigerant. | 1. Remove excess refrigerant. |
| | 2. Non-condensibles in system. | 2. Remove non-condensibles from system. |
| | 3. Dirty condenser coil. | 3. Clean condenser coil. |
| | 4. Condenser fan not running. | 4. Check electrical circuit and fuse. Check fan cycling controls. |
| | 5. Discharge valve partially closed. | 5. Open valve. |
| High Suction Pressure | 1. Improper suction pressure regulator setting. | 1. Check electrical circuit and fuse. Check fan cycling. |
| | 2. Thermostatic expansion valve pressure limit feature incorrect or inoperative. Overfeeding. | 2. Check bulb location and clamping. Adjust superheat.Replace expansion valve power head. |
| | 3. Damaged valves in compressor. | 3. Replace valve plate or compressor. |
| | 4. Worn piston rings and/or cylinder. | 4. Replace compressor. |
| | 5. Room load too large. | 5. Reduce the load or add more equipment. |
| | 6. Actively pulling down a hot walk-in box. | 6. Wait for box to cool down. |
| Low Head Pressure | 1. Insufficient refrigerant. | 1. Check system for leaks. Repair leaks and add refrigerant. |
| | 2. Faulty condenser temperature controls/ settings (head pressure flood valve, fan cycle controls) during cold weather operation. | 2. Check condenser controls and reset to obtain desired condensing temperature. |
| | 3. Damaged valves in compressor. | 3. Replace valve plate or compressor. |
| | 4. Worn piston rings and/or cylinder. | 4. Replace compressor. |

# TROUBLESHOOTING

| Problem | Possible Causes | Possible Corrective Action |
|---|---|---|
| Low Suction Pressure | 1. Insufficient refrigerant | 1. Check system for leaks. Repair leaks and add refrigerant. |
| | 2. Unit cooler iced up or air flow | 2. Check defrost system. Clean the coil. Check fan operation. Check air flow. |
| | 3. Plugged liquid line filter-drier. | 3. Replace filter-drier or cartridges. |
| | 4. Plugged suction filter. | 4. Replace the suction filter. |
| | 5. Improper suction pressure regulator setting. | 5. Check setting and correct as required. |
| | 6. Expansion valve superheat too high or valve too small. | 6. Adjust valve for proper superheat or replace the expansion valve if too small. |
| | 7. Faulty fan/motor. | 7. Replace the oil lamp. |
| | 8. Undersized unit cooler. | 8. Replace unit cooler. |
| Loss of Oil or Loss of Pressure | 1. Insufficient oil in system. | 1. Thoroughly defrost evaporator. After defrost, observe level, add oil. Check for leaks. Check lines for proper slope and traps. |
| | 2. Compressor short cycling. | 2. Check low pressure control settings. |
| | 3. Defective oil pressure control. | 3. Replace oil pressure control. |
| | 4. Loose fittings on pump housing, compressor or oil lines. | 4. Check and tighten system. Check bottom plate on compressor. |
| | 5. Too much liquid refrigerant in the crankcase. | 5. Adjust expansion valve for higher superheat. Check crankcase heater. |
| | 6. Plugged suction oil strainer. | 6. Clean oil strainer. |
| | 7. Worn oil pump. | 7. Replace the oil pump. |
| | 8. Worn compressor bearings. | 8. Replace the compressor. |
| | 9. Oversized suction line or improper riser design. | 9. Correct as necessary. |

# TROUBLESHOOTING

| Problem | Possible Causes | Possible Corrective Action |
|---|---|---|
| Ice Build-up on Ceiling, Evaporator Guards or Fan Blades | 1. Defrost time is too long. | 1. Adjust defrost termination thermostat. |
| | 2. Too many defrost. | 2. Reduce number of defrost. |
| | 3. Defective fan delay, defrost termination, timer, or heater. | 3. Replace the defective component. |
| | 4. Ambient air leaks into room. | 4. Seal all air leaks. |
| Coil not Clearing During Defrost | 1. Coil temperature not getting high enough during defrost, or defrost cycle too short. | 1. Check heater operation. Check termination temperature. Check termination temperature. Adjust defrost thermostat for longer defrost. |
| | 2. Not enough defrost per day. | 2. Set timer for more defrost. |
| | 3. Defective defrost controls or timer. | 3. Replace defective component. |

# WATER COOLED CONDENSER MAINTENANCE

**Shell and Tube Condenser**

General: The unit should be level with no horizontal pitch. Connect water lines according to the local plumbing codes.

Fittings: Fittings should be in line so that they are not under tension or forced in anyway. Vibration isolation should be used. If the fittings are out of line or under strain, threads on the fittings may be damaged. Brazed connections must also be carefully aligned before brazing.

Testing: Test for water circuit leaks. Water flow rates below eight feet per second are recommended. Higher velocity through the tubes results in greater risk of impingement corrosion and tube failure.

Chemical Cleaning: Use only preparations from an established, reliable source. follow directions exactly, particularly regarding amounts to use and flushing or neutralizing procedure after cleaning.

Mechanical Cleaning: Drain water from condenser. Remove the nuts, water plates and gaskets from both ends of the condenser. If space is limited, the tubes can be cleaned with only one open end, however it is difficult to flush out closed ended passages.

Cleaning Procedure : Gaskets need only to be rinsed in running water. A rag or soft brush is all that is needed to remove rust any foreign matter. Clear water or a soft brush such as a paint brush should be used to clean the inside of the water end plates.

DO NOT SCRATCH OR DAMAGE THE EPOXY COATING ON THE INSIDE SURFACE OF THE END PLATES. NEVER USE A WIRE BRUSH OR STRONG CAUSTICS ON THESE SURFACES.

Condenser tubes should be flushed clear with air or water. If a rough coating remains inside the tubes, further cleaning is desirable. Nylon, brass or Copper brushes are recommended. Never use any tool which will scratch or otherwise damage the tube surface. Stop when a few places begin to show a Copper color.

After cleaning, wipe all foreign matter from the tube sheets and stubs. To reassemble, replace clean gaskets, water end plates and nuts. Test for leaks. If no leaks are found, the condenser should be isolated from the remaining system and evacuated. After assuring that there are no refrigerant circuit leaks the condenser can be replaced into the system.

WATER CONNECTIONS FOR CITY

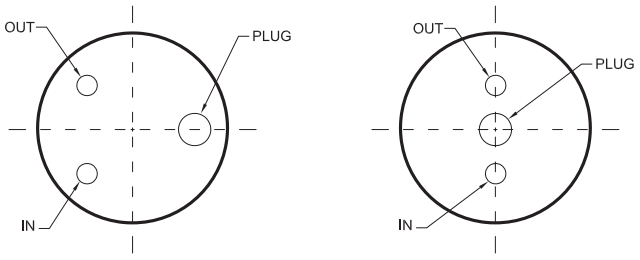


WATER CONNECTIONS FOR TOWER

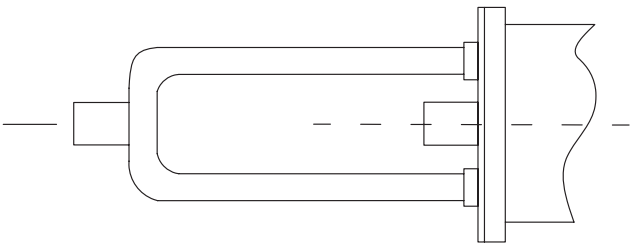

Draining: Theoretically it is easy to drain a condenser; in practice it is complex. As much as 20% of the water in the condenser can be retained if the service technician simply opens the vent and drain fittings on the condenser. To fully drain all water from the condenser tubes, it is necessary to take off the back plate and tilt the condenser a minimum of 5 degrees.

# SYSTEM MAINTENANCE

Remove all dirt and debris from the condenser coil with a brush, blower, or vacuum. Grease and dirt removal may require washing with a coil cleaning detergent. Always rinse thoroughly with clean water after using a chemical cleaner. Do not use cleaners containing ammonia. The coil must be kept clean at all times. Be sure the condenser fans are operating and the air flow is not restricted. Keep the condensing unit area clean.

There is additional oil installed in the compressor to allow for a limited amount to circulate throughout the system with the refrigerant. The oil level may fall when the compressor is running. The oil is clear and can be difficult to see if above the oil level glass. The longer the compressor runs the lower the oil level may go. The oil level may approach the bottom of the glass before the system cycles off or a defrost occurs. After an off cycle or defrost period, the oil normally returns to the compressor. Once the room is down to design temperature the oil level range should be about 1/8 to 5/8 glass.

Excess oil dangerous to the compressor. Do not add oil just because the oil safety trips out. Thoroughly check out the loss oil or oil pressure before adding oil. Correct any condition that prevents oil return to the compressor. Visually check the oil pump, oil lines, and compressor bottom plate area for oil leaks.

Add only lubricant approved by the compressor manufacturer. Poloyester, “POE", synthetic lubricant must be used with R404A, R407A, R407C, R448A/R449A, R454A, R454C, R455A, and R507 systems. Take caution not to fill above 1/2 glass. POE lubricants quickly absorb moisture from the atmosphere. The system must be kept sealed as much as possible to prevent moisture contamination.

Check the system pressures and temperatures on a regular basis to be sure they are within the recommended guidelines.

Evaporators should be checked frequently and cleaned of dirt and grease accumulation. Disconnect electrical power to the evaporator when inspecting or cleaning. The fan blades, fan guards and coil may require frequent cleaning. Do not use ammonia or other cleaning chemicals that are corrosive to copper or aluminum. The drain pan should be lowered for inspection and thoroughly cleaned to prevent buildup of foreign materials. Make sure the drain connection area is clean and clear.

Make sure all motors and fans are in good operating condition. If uneven frosting of the coil is observed, look for air leaking into the room. Eliminate all air leaks for optimum evaporator performance and energy savings. Do not leave the access panels off after adjustment or service. The access panels should always be in place when the evaporator is operating. Keep cold room doors closed when possible.

# REPLACEMENT PARTS

For the most current list of replacement parts, please scan the QR code or visit russell.htpg.com/pricing/

# SYSTEM START-UP CHECK LIST

Customer _____ Job Name _____

City / State _____ System No. _____ Date _____

Condensing Unit Model No. _____ Serial No. _____

Evaporator Model No. _____ Qty. _____ Serial No. _____

Room No. or Name _____ Design Temp. _____°F Size(Ft.)_____L x _____W x _____H

Suction Line _____OD Liquid Line _____OD Equivalent Length _____Ft. Liquid Lift _____Ft.

Leak Test at _____ PSIG, For_____ Hours System is Leak Free _____

Evacuated _____Times to _____ Microns + Final Vacuum to _____ Microns, for _____ Hours Total Hrs _____

Sight Glass Dry _____ Pressure Controls Set _____ Thermostat Set _____ Outdoor Ambient _____°F

Design Voltage _____ Test Volts _____ Control Circuit Volts _____

Disconnect Fuse Size _____ Amps Control Circuit Fuse _____ Amps Estimated Refrigerant Charge _____ Lbs.

Refrigerant R-_____ Charge _____+_____+_____ = _____ Total Lbs. Sight Glass Clear _____

Compressor Oil Level _____ Glass Evap. Fans Running _____ Room Temp at Start-up _____°F

Room Temp. at 1 Hr. _____°F Compressor Oil Level _____ Glass Defrost Timer Set _____

Room Temp. at 2 Hr. _____°F Compressor Oil Level _____ Glass Sight Glass Clear _____

Room Temp. at 4 Hr. _____°F Compressor Oil Level _____ Glass Outdoor Ambient _____

| **Electrical** | **Specplate** | **Test Amps** | | |
|---|---|---|---|---|
| Component | Amps | L1 | L2 | L3 |
| Compressor | _____ | _____ | _____ | _____ |
| Condenser | _____ | _____ | _____ | _____ |
| Evaporator | _____ | _____ | _____ | _____ |
| Defrost Heaters | _____ | _____ | _____ | _____ |

Evaporator Suction Temp _____°F Evaporator Suction Pressure _____ PSIG

Convert PSIG to _____°F Evaporator Superheat _____°F

Compressor Suction Temp _____°F Compressor Suction Pressure _____PSIG

Convert PSIG to _____°F Compressor Superheat _____°F Sight Glass Clear _____

Compressor Discharge Pressure _____PSIG Compressor Discharge Line Temp _____°F

Liquid Temp. Leaving Condensing Unit _____°F Liquid Temp. Entering Expansion Valve _____°F

Evaporator Drain Line Trapped _____, Heated _____, Sloped _____, Will not freeze up _____

Type of Defrost: _____ Air _____Electric _____Hot Gas Defrost Time _____Min. Is CoilClean? _____

Temperature Termination _____ Fan Delay _____ Is Defrost Satisfactory? _____

Compressor Oil Level _____Glass Timer Set _____Defrost per Day with _____Minute Fail Safe

**FINAL CONDITION**

Room Thermostat Set at _____°F Room Temp. Holding at _____°F

Evaporator Superheat _____°F Sight Glass Clear _____ Pumpdown OK _____

Compressor Superheat _____°F Compressor Oil Level _____Glass

Discharge Line Temperature _____°F Suction Pressure _____PSIG

Start-Up By:_____ Company: _____ Phone: _____

# REFRIGERATION SYSTEM SERVICE RECORD

Customer _____ Job Name _____

City / State _____ System No. _____ Date _____

Condensing Unit Model No. _____ Serial No. _____

Evaporator Model No. _____ Qty. _____ Serial No. _____

Room No. or Name _____ Design Temp. _____°F Actual Room Temp. _____°F

Date System was Installed _____ Product Stored _____ Total Pounds _____

Routine / Scheduled Preventive Maintenance ☐ Service Call ☐ Outdoor Ambient _____°F

Service Requested _____

_____

Service Performed _____

_____

_____

Design Voltage _____ Actual Voltage _____ Refrigerant R- _____

| **Electrical** | **Specplate** | **Test Amps** | | |
|---|---|---|---|---|
| Component | Amps | L1 | L2 | L3 |
| Compressor | _____ | _____ | _____ | _____ |
| Condenser | _____ | _____ | _____ | _____ |
| Evaporator | _____ | _____ | _____ | _____ |
| Defrost Heaters | _____ | _____ | _____ | _____ |

Evaporator Suction Temp _____°F Evaporator Suction Pressure _____ PSIG

Convert PSIG to _____°F Evaporator Superheat _____°F

Compressor Suction Temp _____°F Compressor Suction Pressure _____PSIG

Convert PSIG to _____°F Compressor Superheat _____°F Sight Glass Clear _____

Compressor Discharge Pressure _____PSIG Compressor Discharge Line Temp _____°F

Compressor Oil Level _____Glass Sight Glass Clear _____ Sight Glass Dry _____

Cond. Coil Clean _____ All Cond. Fans Operate _____ Liquid Temp. Leaving Cond. Unit _____°F

Room Thermostat Set at _____°F Room Temperature Holding at _____°F

Evaporator Coil Clean _____ Drain Pan Clean _____ Fan Blades / Guards Clean _____

All Evap. Fans Operate _____ Room Air Circulation OK _____ Defrosting OK _____

System Pumpdown OK _____ Cooler and Equipment in Safe Condition _____

System Notes: _____

_____

_____

_____

_____

_____

Serviced by _____

# DECOMMISSIONING

Before carrying out this procedure, it is essential that the technician is completely familiar with the equipment and all its details. It is recommended good practice that all refrigerants are recovered safely. Prior to the task being carried out, an oil and refrigerant sample shall be taken in case analysis is required prior to re-use of recovered refrigerant. It is essential that electrical power is available before the task commences.

a. Become familiar with the equipment and its operation.

b. Isolate the system electrically.

c. Before attempting the procedure, ensure that:
   - Mechanical handling equipment is available, if required, for handling refrigerant cylinders.
   - All personal protective equipment is available and being used correctly.
   - The recovery process is always supervised by a competent person.
   - recovery equipment and cylinders conform to the appropriate standards.

d. Pump down refrigerant system, if possible.

e. If a vacuum is not possible, make a manifold so that refrigerant can be removed from various parts of the system.

f. Make sure that cylinder is situated on the scales before recovery takes place.

g. Start the recovery machine and operate in accordance with instructions.

h. Do not overfill cylinders (no more than 80 % volume liquid charge).

i. Do not exceed the maximum working pressure of the cylinder, even temporarily.

j. When the cylinders have been filled correctly and the process completed, make sure that the cylinders and the equipment are removed from site promptly and all isolation valves on the equipment are closed off.

k. Recovered refrigerant shall not be reused unless it has been properly recovered and filtered, and may be used in the system it was removed from or another system belonging to the **same owner**, otherwise it must be sent to an EPA certified facility to be restored to ARI standard 700 purity.

Decommissioned equipment shall be labeled stating that it has been de-commissioned and emptied of refrigerant. The label shall be dated and signed.

HTPG®

ENGINEERED FOR COOL.™

©2026 Heat Transfer Products Group
Published March 2026
IOM_A2L_SYS_0326

Scan QR Code to download a digital version of this guide or Scan QR Code located in the unit ebox.