A1/A2L
DUAL-RATED NEXT-GEN II
3 TO 22 HP
AIR-COOLED CONDENSING UNITS

3 TO 22 HP AIR-COOLED CONDENSING UNITS

Next Gen II's 3 to 22 HP Air-Cooled condensing units capitalize on the Next-Gen's design successes. The improvements start with an expanded range of compressor types selected for use with low GWP refrigerants. Compressors are housed in a durable G90 galvanized steel painted enclosure with an open view, flow-through equipment guard; a highly efficient enhanced copper tube condenser; three phase fan motors; and externally mounted service valves that are easily accessible from the cabinet exterior. The unit's large control panel includes a swing-wide hinged door and abundant room for standard components and system accessories along with color-coded and numbered point-to-point wiring that assist in easy service and unit maintenance.

INTEGRAL SUBCOOLING CIRCUIT

All Next Gen II Air-Cooled condensing units feature an integral subcooling circuit that allows saturated liquid to flow from the receiver to the condenser where the refrigerant is subcooled by ambient air. This provides an average of 3°F to 5°F of subcooling for higher efficiency while assuring optimal expansion device operation.

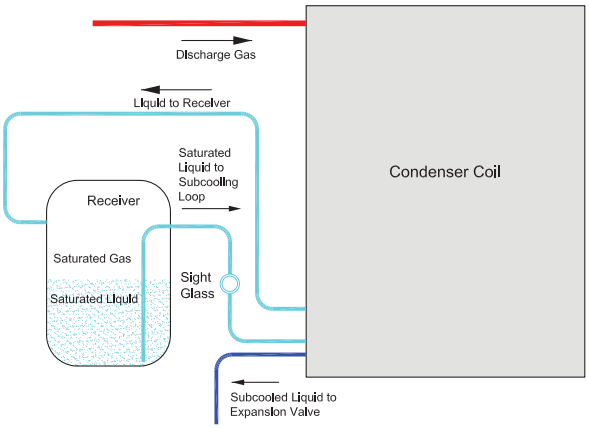

* Unit above is a 2 fan model with grills removed.
Shown with optional components installed.

FEATURES AND OPTIONS

● Standard ○ Optional ⊖ Not Available

Description	Flooded			Non-Flooded MD		
	RFD	RFO	RFB	RBD	RBO	RBB
All weather G90 galvanized steel painted enclosure		●			●	
Removable top and side panels for ease of service		●			●	
Large control panel for power and control circuits		●			●	
Swing wide hinged control panel door		●			●	
316 Stainless Steel cabinet		○			○	
Hail / Snow Guards (Loose)		○			○	
Liquid injection/Demand Cooling™ for low temperature compressors		●			●	
Copeland Discus™	●	⊖	⊖	●	⊖	⊖
Copeland Scroll™	⊖	●	⊖	⊖	●	⊖
Bitzer Semi-Hermetic	⊖	⊖	●	⊖	⊖	●

FEATURES AND OPTIONS CONTINUED

● Standard ○ Optional ⊖ Not Available

Description	Flooded			Non-Flooded		
	RFD	RFO	RFB	RBD	RBO	RBB
High efficiency condenser with enhanced copper tubes/aluminum fins		●			●	
Integral liquid subcooling circuit		●			●	
3 phase condenser fan motor(s) (230V and 460V medium temp only)		●			●	
2-speed EC motor (low temp only)		●			●	
Flooded head pressure control		●			⊖	
Fan cycle control		⊖			●	
Copper or ElectroFin® coated coil		○			○	
Crankcase heater		●			●	
Compressor contactor		●			●	
Control transformer (460V to 230V) as required		●			●	
Dual pressure control (auto reset) w/ Refflex® flexible lines		●			●	
Color-coded wiring for ease of serviceability		●			●	
Pump down toggle switch		●			●	
External fused or non-fused disconnect		○			○	
Phase loss monitor		○			○	
Current sensing relay		○			○	
Crankcase pressure regulator		○			○	
Thru-the-door non-fused disconnect		○			○	
Electric defrost kits with electronic time clocks		○			○	
Electronic or mechanical air defrost time clocks		○			○	
50 HZ defrost timers with or without contactors		○			○	
Vertical receiver (needs less refrigerant for liquid seal)		●			●	
Receiver isolation valve		●			●	
Pressure relief valve (*see note below)		●			●	
Base mounted liquid & suction shut-off valves (External)		●			●	
Liquid line kit - piping, sealed filter drier & sight glass		●			●	
Suction line piping		●			●	
Additional compressor cooling for medium temp models - liquid injection, suction accumulator, and insulated suction line components and piping.		○			○	
Additional compressor cooling for low temp models - insulated suction line components and piping		○			○	
Oversized receiver		○			○	
Heated and insulated receiver (temperature controlled and low pressure)		○			○	
Sealed suction filter		○			○	
Suction line accumulator		○			○	
Oil separator		○			○	
Replaceable core liquid and suction filters		○			○	

* Models in FD1 cabinet include a fusible plug for pressure relief. See price list for optional pressure relief valve.
Models in FD2 and FD3 cabinets include a pressure relief valve.

MODEL NOMENCLATURE

CONFIGURABLE BASE MODEL

R	F	D	S	004	M	4A	E	A
Brand	Style	Compressor Type	Compressor Configuration	Horsepower	Temperature Range	Refrigerant Class	Voltage Code	Vintage
R = Russell	F = Flooded B = Non-Flooded	D = Discuss O = Scroll B = Bitzer	S = Single Horizontal (Large)	004 = 4 HP	E = Extended Medium L = Low M = Medium	4A = Multiple Refrigerants†	E = 208-230/3/60 G= 460/3/60 N = 200-220/3/50 Q = 380/3/50	A

† Refrigerants are R454A, R454C, R455A and R404A, R407A, R407C, R407F, R448A, R449A

CAPACITY DATA (BTUH)

MEDIUM TEMPERATURE // R454A DISCUS // 60 HZ‡

Ambient Temp. (°F)	Model No.	Comp. Model No.	Suction Temperature (°F)										
			40°	35°	30°	25°	20°	15°	10°	5°	0°	-5°	-10°
90°	R*DS004M4A**	2YC3R51KE	61,570	55,990	50,720	46,140	41,770	37,250	32,940	28,860	25,390	22,090	18,770
	R*DS005M4A**	2YD3R59KE	69,150	63,050	57,260	52,250	47,400	42,330	37,600	33,090	29,130	25,380	21,580
	R*DS006M4A**	2YL3R73KE	91,980	83,180	75,340	68,400	61,730	54,900	48,480	42,480	37,250	32,400	27,430
	R*DS007M4A**	2YA3R82K0	101,700	92,500	83,700	76,220	68,990	61,440	54,280	47,600	42,030	36,380	31,150
	R*DS008M4A**	3YA3R99KE	119,410	108,610	98,540	89,750	81,450	72,750	64,510	56,790	50,100	43,560	37,290
	R*DS010M4A**	3YB3R11ME	136,830	124,780	113,250	103,440	93,920	84,030	74,780	66,060	59,360	51,210	43,840
	R*DS012M4A**	3YF3R14ME	163,570	149,160	135,280	123,310	112,840	99,860	88,680	78,240	68,360	60,410	51,790
	R*DS015M4A**	3YS3R16ME	178,700	163,470	148,390	135,740	123,460	110,310	98,180	86,580	76,210	66,930	57,460
95°	R*DS004M4A**	2YC3R51KE	59,060	53,680	48,580	44,170	39,990	35,640	31,480	27,620	24,240	21,080	17,940
	R*DS005M4A**	2YD3R59KE	66,290	60,470	54,890	50,050	45,330	40,480	35,950	31,670	27,830	24,280	20,640
	R*DS006M4A**	2YL3R73KE	87,600	79,370	72,330	62,300	59,130	52,300	46,310	40,540	35,730	30,930	26,290
	R*DS007M4A**	2YA3R82K0	97,780	88,770	80,390	73,170	66,090	58,840	51,950	45,640	39,520	34,810	29,690
	R*DS008M4A**	3YA3R99KE	114,730	104,380	94,610	86,110	78,110	69,770	61,740	54,370	47,690	41,880	35,810
	R*DS010M4A**	3YB3R11ME	131,390	119,790	108,750	99,110	90,010	80,600	71,640	63,290	55,940	48,890	41,970
	R*DS012M4A**	3YF3R14ME	157,230	143,230	129,850	118,160	107,470	95,920	85,090	74,890	65,980	57,670	49,460
	R*DS015M4A**	3YS3R16ME	171,860	156,180	142,130	129,670	117,790	105,230	93,610	82,660	72,180	63,680	55,040
100°	R*DS004M4A**	2YC3R51KE	56,540	51,370	46,450	42,240	38,210	34,010	30,060	26,360	23,150	20,130	17,150
	R*DS005M4A**	2YD3R59KE	63,380	57,860	52,460	47,800	43,310	38,730	34,340	30,180	26,570	23,180	19,800
	R*DS006M4A**	2YL3R73KE	84,690	76,870	69,350	62,870	56,680	50,280	44,340	38,850	34,060	29,630	25,490
	R*DS007M4A**	2YA3R82K0	93,730	85,220	77,080	70,120	63,430	56,110	49,680	43,580	38,310	33,340	28,380
	R*DS008M4A**	3YA3R99KE	110,150	99,990	90,750	82,440	74,820	66,680	59,040	51,830	45,680	39,720	34,020
	R*DS010M4A**	3YB3R11ME	125,970	114,830	104,070	94,970	86,070	76,890	68,500	60,340	52,170	46,620	40,040
	R*DS012M4A**	3YF3R14ME	151,500	137,660	125,030	113,510	102,530	91,830	81,260	71,550	62,480	55,190	47,550
	R*DS015M4A**	3YS3R16ME	164,160	150,360	136,120	124,100	112,730	100,560	89,160	78,780	69,810	60,870	52,430
110°	R*DS004M4A**	2YC3R51KE	51,420	46,690	42,210	38,330	34,660	30,830	27,220	23,880	21,000	18,310	15,690
	R*DS005M4A**	2YD3R59KE	57,710	52,550	47,610	43,360	39,330	35,090	31,140	27,400	24,130	21,050	18,030
	R*DS006M4A**	2YL3R73KE	77,500	70,050	63,260	57,190	51,480	45,610	40,160	35,140	30,820	26,700	22,720
	R*DS007M4A**	2YA3R82K0	85,740	77,740	70,370	63,710	57,470	51,030	44,990	39,420	34,490	30,000	25,640
	R*DS008M4A**	3YA3R99KE	100,430	91,230	82,480	75,150	67,830	60,400	53,370	46,910	41,430	36,110	30,780
	R*DS010M4A**	3YB3R11ME	114,950	100,110	94,850	86,290	78,210	69,930	61,930	54,600	48,130	41,980	36,070
	R*DS012M4A**	3YF3R14ME	137,800	125,340	113,330	103,070	93,540	83,080	73,630	64,690	57,030	49,420	42,690
	R*DS015M4A**	3YS3R16ME	149,900	136,560	124,500	112,840	102,160	91,120	80,710	71,130	62,900	54,900	47,200

Additional Compressor Cooling Required†

* Each asterisk represents a variable character based upon model, voltage, and vintage ordered. See page 4 for nomenclature.

† See page 50 for Additional Compressor Cooling Graph.

‡ Multiply capacity by .83 when used with 50 Hz power.

CAPACITY DATA (BTUH)

MEDIUM TEMPERATURE // R454C DISCUS // 60 HZ‡

Ambient Temp. (°F)	Model No.	Comp. Model No.	Suction Temperature (°F)										
			40°	35°	30°	25°	20°	15°	10°	5°	0°	-5°	-10°
90°	R*DS004M4A**	2YC3R51KE	52,950	47,800	43,030	38,880	34,950	30,930	27,210	23,770	20,160	17,890	15,170
	R*DS005M4A**	2YD3R59KE	59,630	54,010	48,740	44,170	39,780	35,270	31,110	27,130	23,770	20,650	17,430
	R*DS006M4A**	2YL3R73KE	78,270	70,550	63,520	57,110	51,120	45,210	39,670	34,340	29,990	25,720	21,740
	R*DS007M4A**	2YA3R82K0	87,030	78,570	70,690	63,980	57,380	50,650	44,520	38,840	31,200	29,070	24,700
	R*DS008M4A**	3YA3R99KE	102,340	92,590	83,470	75,470	68,060	60,320	53,120	46,400	40,490	34,960	29,710
	R*DS010M4A**	3YB3R11ME	117,650	106,560	96,280	87,290	78,830	70,000	61,810	54,170	47,540	41,090	35,010
	R*DS012M4A**	3YF3R14ME	140,720	127,760	114,780	103,750	93,890	83,040	73,280	64,260	56,350	48,700	41,560
	R*DS015M4A**	3YS3R16ME	154,230	139,850	126,410	114,330	103,520	92,030	81,070	71,070	63,000	54,070	46,190
95°	R*DS004M4A**	2YC3R51KE	50,690	45,770	41,150	37,160	33,360	29,580	25,960	22,690	19,770	17,080	14,470
	R*DS005M4A**	2YD3R59KE	57,100	51,730	46,640	42,170	37,970	33,610	29,630	25,900	22,640	19,620	16,630
	R*DS006M4A**	2YL3R73KE	75,120	67,740	60,820	54,390	48,960	43,080	37,800	32,850	28,350	24,610	20,700
	R*DS007M4A**	2YA3R82K0	83,520	75,380	67,790	61,110	54,780	48,510	42,430	37,030	33,660	27,830	23,460
	R*DS008M4A**	3YA3R99KE	98,250	88,960	80,080	72,360	65,180	57,570	50,730	44,320	38,520	33,420	28,260
	R*DS010M4A**	3YB3R11ME	112,750	102,140	92,060	83,710	75,540	66,880	59,010	51,750	45,350	39,230	33,360
	R*DS012M4A**	3YF3R14ME	134,990	121,960	109,500	99,410	89,650	79,260	70,020	61,330	53,690	46,640	39,590
	R*DS015M4A**	3YS3R16ME	147,670	133,990	120,530	109,480	98,650	87,460	77,240	67,750	59,360	51,710	43,980
100°	R*DS004M4A**	2YC3R51KE	48,450	43,680	39,190	35,380	31,830	28,080	24,650	21,530	18,780	16,240	13,790
	R*DS005M4A**	2YD3R59KE	54,540	49,430	44,460	40,240	36,150	32,030	28,160	24,610	21,660	18,630	15,870
	R*DS006M4A**	2YL3R73KE	71,970	64,760	58,060	52,250	46,600	41,180	36,020	31,280	27,210	23,420	19,740
	R*DS007M4A**	2YA3R82K0	80,040	72,130	64,800	58,370	52,230	46,170	40,410	35,220	30,720	26,430	22,370
	R*DS008M4A**	3YA3R99KE	94,120	85,020	76,260	69,060	62,000	54,940	48,270	42,080	36,860	31,680	26,910
	R*DS010M4A**	3YB3R11ME	107,910	97,710	88,220	79,760	71,870	63,960	56,140	49,220	43,100	37,380	31,740
	R*DS012M4A**	3YF3R14ME	129,110	116,730	104,910	95,120	85,730	75,630	66,670	58,220	51,020	44,310	37,710
	R*DS015M4A**	3YS3R16ME	140,740	128,350	115,760	104,840	94,090	83,700	72,630	63,910	56,210	48,830	41,680
110°	R*DS004M4A**	2YC3R51KE	43,810	39,500	35,410	31,930	28,610	25,250	22,180	19,350	16,930	14,680	12,560
	R*DS005M4A**	2YD3R59KE	49,440	44,700	40,190	36,290	32,590	28,860	25,340	22,180	19,390	16,840	14,390
	R*DS006M4A**	2YL3R73KE	65,570	58,830	52,490	47,290	42,070	37,140	32,460	28,120	24,330	21,070	17,890
	R*DS007M4A**	2YA3R82K0	72,820	65,700	58,570	52,930	47,160	41,680	36,440	31,720	27,950	23,780	20,270
	R*DS008M4A**	3YA3R99KE	85,430	77,010	69,170	62,570	55,980	49,430	43,460	37,910	33,010	28,550	24,330
	R*DS010M4A**	3YB3R11ME	98,110	88,580	79,720	72,140	64,830	57,520	50,520	44,170	38,750	33,500	28,480
	R*DS012M4A**	3YF3R14ME	117,190	106,200	95,020	85,840	77,400	68,210	60,060	52,290	45,550	39,610	33,910
	R*DS015M4A**	3YS3R16ME	128,590	116,320	104,270	94,450	85,070	75,210	66,160	57,930	50,680	61,310	37,580

Additional Compressor Cooling Required†

* Each asterisk represents a variable character based upon model, voltage, and vintage ordered. See page 4 for nomenclature.

† See page 50 for Additional Compressor Cooling Graph.

‡ Multiply capacity by .83 when used with 50 Hz power.

CAPACITY DATA (BTUH)

MEDIUM TEMPERATURE // R455A DISCUS // 60 HZ‡

Ambient Temp. (°F)	Model No.	Comp. Model No.	Suction Temperature (°F)										
			40°	35°	30°	25°	20°	15°	10°	5°	0°	-5°	-10°
90°	R*DS004M4A**	2YC3R51KE	54,880	49,660	44,650	40,300	36,200	32,010	28,060	24,450	21,260	18,360	15,520
	R*DS005M4A**	2YD3R59KE	61,910	56,180	50,650	45,820	41,230	36,590	32,180	28,120	24,480	21,160	17,880
	R*DS006M4A**	2YL3R73KE	81,170	73,240	65,600	59,140	52,760	46,530	40,790	35,460	30,740	26,470	22,240
	R*DS007M4A**	2YA3R82K0	90,330	81,530	73,330	66,200	59,270	52,400	46,010	40,030	34,710	29,980	25,240
	R*DS008M4A**	3YA3R99KE	106,350	96,240	86,760	78,510	70,400	62,510	54,940	47,980	41,690	36,120	30,400
	R*DS010M4A**	3YB3R11ME	122,530	111,320	100,500	91,060	81,890	72,790	64,230	56,170	49,140	42,550	36,040
	R*DS012M4A**	3YF3R14ME	146,520	132,410	119,170	107,650	97,170	86,400	76,140	66,520	57,980	50,380	42,620
	R*DS015M4A**	3YS3R16ME	159,950	145,400	130,790	118,890	107,610	95,330	84,340	73,730	64,540	55,960	47,110
95°	R*DS004M4A**	2YC3R51KE	52,580	47,480	42,620	38,450	34,500	30,510	26,760	23,310	20,270	17,510	14,830
	R*DS005M4A**	2YD3R59KE	59,310	53,730	48,410	43,830	39,440	34,880	30,680	26,780	23,350	20,130	17,040
	R*DS006M4A**	2YL3R73KE	77,890	70,050	62,710	56,450	50,610	44,550	38,960	33,820	29,440	25,160	21,280
	R*DS007M4A**	2YA3R82K0	86,630	78,170	70,200	63,150	56,670	50,030	43,900	38,160	33,140	28,570	24,140
	R*DS008M4A**	3YA3R99KE	102,160	92,220	82,930	74,980	67,510	59,630	52,290	45,800	39,810	34,220	29,040
	R*DS010M4A**	3YB3R11ME	117,610	106,650	95,990	87,020	78,520	69,470	61,340	53,600	46,800	40,490	34,380
	R*DS012M4A**	3YF3R14ME	139,970	126,520	113,910	103,500	93,330	82,490	72,630	63,390	55,310	47,920	40,640
	R*DS015M4A**	3YS3R16ME	153,710	139,270	125,560	113,790	102,480	91,040	80,240	70,210	61,610	53,360	45,210
100°	R*DS004M4A**	2YC3R51KE	50,250	45,360	40,640	36,650	32,880	29,050	25,480	22,170	19,310	16,680	14,130
	R*DS005M4A**	2YD3R59KE	56,660	51,360	46,260	41,770	37,640	33,230	29,230	25,480	22,220	19,210	16,260
	R*DS006M4A**	2YL3R73KE	74,530	67,150	59,980	53,920	48,240	42,470	37,150	32,190	27,930	24,050	20,210
	R*DS007M4A**	2YA3R82K0	82,970	74,810	67,010	60,500	54,020	47,740	41,810	36,300	31,590	27,230	22,990
	R*DS008M4A**	3YA3R99KE	97,740	88,440	79,180	71,460	64,260	56,850	49,850	43,480	37,930	32,550	27,610
	R*DS010M4A**	3YB3R11ME	112,640	101,800	91,860	82,990	74,850	66,220	58,380	51,000	44,600	38,380	32,670
	R*DS012M4A**	3YF3R14ME	134,000	121,820	109,070	98,610	88,640	78,670	69,220	60,230	52,730	45,320	38,620
	R*DS015M4A**	3YS3R16ME	147,360	133,820	120,620	108,560	97,710	86,910	76,590	66,830	58,600	50,340	42,920
110°	R*DS004M4A**	2YC3R51KE	45,510	40,990	36,800	33,150	29,630	26,170	22,950	19,990	17,450	15,160	12,920
	R*DS005M4A**	2YD3R59KE	51,290	46,390	41,760	37,670	33,830	29,950	26,320	22,950	20,080	17,390	14,820
	R*DS006M4A**	2YL3R73KE	67,760	60,710	54,330	48,820	43,510	38,240	33,440	29,010	25,180	21,710	18,330
	R*DS007M4A**	2YA3R82K0	75,530	67,990	60,800	54,600	48,800	43,050	37,700	32,690	28,370	24,450	20,720
	R*DS008M4A**	3YA3R99KE	89,010	79,980	71,950	64,690	57,920	51,210	44,870	39,050	33,970	29,230	24,810
	R*DS010M4A**	3YB3R11ME	102,240	92,420	83,090	75,050	67,380	59,660	52,410	45,860	39,880	34,580	29,330
	R*DS012M4A**	3YF3R14ME	122,500	110,460	98,830	89,610	80,080	70,930	62,140	54,130	47,090	40,680	34,680
	R*DS015M4A**	3YS3R16ME	134,260	120,850	108,650	98,460	88,550	78,190	68,830	59,900	52,170	45,210	38,570

Additional Compressor Cooling Required†

* Each asterisk represents a variable character based upon model, voltage, and vintage ordered. See page 4 for nomenclature.

† See page 50 for Additional Compressor Cooling Graph.

‡ Multiply capacity by .83 when used with 50 Hz power.

CAPACITY DATA (BTUH)

MEDIUM TEMPERATURE // R404A DISCUS // 60 HZ‡

Ambient Temp. (°F)	Model No.	Comp. Model No.	Suction Temperature (°F)									
			40°	35°	30°	25°	20°	15°	10°	5°	0°	-10°
90°	R*DS004M4A**	2YC3R51KE	63,000	57,300	51,860	46,700	41,840	37,450	33,050	29,140	25,560	21,980
	R*DS005M4A**	2YD3R59KE	72,940	66,660	60,610	54,820	49,320	44,300	39,280	34,800	30,720	26,640
	R*DS006M4A**	2YL3R73KE	94,280	85,670	77,540	69,900	62,760	56,380	49,990	44,350	39,210	34,070
	R*DS007M4A**	2YA3R82K0	105,600	96,310	87,570	79,380	71,720	64,830	57,940	51,800	46,100	40,400
	R*DS008M4A**	3YA3R99KE	120,190	110,010	100,310	91,130	82,460	74,580	66,690	59,590	53,010	46,430
	R*DS010M4A**	3YB3R11ME	139,160	127,650	116,730	106,400	96,660	87,770	78,870	70,790	63,190	55,590
	R*DS012M4A**	3YF3R14ME	175,770	160,940	146,870	133,570	121,070	109,740	98,410	88,240	78,800	69,360
	R*DS015M4A**	3YS3R16ME	190,590	174,860	159,860	145,650	132,220	120,010	107,790	96,770	86,510	76,250
95°	R*DS004M4A**	2YC3R51KE	59,970	54,500	49,280	44,350	39,700	35,500	31,290	27,550	24,130	20,710
	R*DS005M4A**	2YD3R59KE	69,480	63,470	57,680	52,140	46,880	42,090	37,290	33,010	29,110	25,210
	R*DS006M4A**	2YL3R73KE	89,960	81,720	73,940	66,630	59,780	53,670	47,560	42,160	37,230	32,300
	R*DS007M4A**	2YA3R82K0	100,790	91,900	83,540	75,700	68,370	61,770	55,170	49,280	43,800	38,320
	R*DS008M4A**	3YA3R99KE	114,830	105,090	95,830	87,050	78,760	71,220	63,680	56,880	50,550	44,220
	R*DS010M4A**	3YB3R11ME	132,920	121,930	111,500	101,620	92,300	83,790	75,270	67,530	60,260	52,990
	R*DS012M4A**	3YF3R14ME	167,930	153,760	140,300	127,590	115,630	104,790	93,940	84,200	75,160	66,120
	R*DS015M4A**	3YS3R16ME	182,090	167,040	152,710	139,120	126,280	114,590	102,900	92,330	82,510	72,690
100°	R*DS004M4A**	2YC3R51KE	–	51,720	46,740	42,020	37,580	33,570	29,550	25,980	22,720	19,460
	R*DS005M4A**	2YD3R59KE	–	60,280	54,750	49,470	44,440	39,870	35,300	31,230	27,520	23,810
	R*DS006M4A**	2YL3R73KE	–	77,770	70,340	63,360	56,820	50,980	45,130	39,980	35,260	30,540
	R*DS007M4A**	2YA3R82K0	–	87,500	79,510	72,020	65,020	58,710	52,400	46,740	41,490	36,240
	R*DS008M4A**	3YA3R99KE	–	100,260	91,420	83,050	75,130	67,930	60,720	54,220	48,170	42,120
	R*DS010M4A**	3YB3R11ME	–	116,210	106,270	96,850	87,960	79,820	71,680	64,270	57,300	50,330
	R*DS012M4A**	3YF3R14ME	–	146,610	133,770	121,640	110,230	99,880	89,520	80,200	71,550	62,900
	R*DS015M4A**	3YS3R16ME	–	159,300	145,580	132,620	120,360	109,200	98,030	87,940	78,540	69,140
110°	R*DS004M4A**	2YC3R51KE	–	–	41,720	37,440	33,410	29,770	26,130	22,900	19,960	17,020
	R*DS005M4A**	2YD3R59KE	–	–	48,890	44,120	39,590	35,480	31,360	27,710	24,380	21,050
	R*DS006M4A**	2YL3R73KE	–	–	63,190	56,850	50,930	45,630	40,330	35,650	31,370	27,090
	R*DS007M4A**	2YA3R82K0	–	–	71,480	64,690	58,320	52,580	46,840	41,680	36,870	32,060
	R*DS008M4A**	3YA3R99KE	–	–	82,700	75,130	67,960	61,410	54,860	48,920	43,390	37,860
	R*DS010M4A**	3YB3R11ME	–	–	95,750	87,270	79,240	71,870	64,490	57,740	51,370	45,000
	R*DS012M4A**	3YF3R14ME	–	–	120,760	109,800	99,480	90,110	80,730	72,270	64,390	56,510
	R*DS015M4A**	3YS3R16ME	–	–	131,390	119,670	108,590	98,490	88,380	79,220	70,670	62,120

Additional Compressor Cooling Required†

* Each asterisk represents a variable character based upon model, voltage, and vintage ordered. See page 4 for nomenclature.

† See page 50 for Additional Compressor Cooling Graph.

‡ Multiply capacity by .83 when used with 50 Hz power.

CAPACITY DATA (BTUH)

MEDIUM TEMPERATURE // R407A DISCUS // 60 HZ‡

Ambient Temp. (°F)	Model No.	Comp. Model No.	Suction Temperature (°F)									
			40°	35°	30°	25°	20°	15°	10°	5°	0°	-10°
90°	R*DS004M4A**	2YC3R51KE	60,630	54,300	48,380	42,910	37,870	33,500	29,120	25,410	22,160	18,910
	R*DS005M4A**	2YD3R59KE	68,970	62,060	55,570	49,500	43,900	39,030	34,150	30,020	26,400	22,780
	R*DS006M4A**	2YL3R73KE	89,110	80,200	72,020	64,540	57,670	51,650	45,620	40,320	35,400	30,480
	R*DS007M4A**	2YA3R82K0	100,210	90,330	81,080	72,460	64,470	57,400	50,320	44,150	38,570	32,990
	R*DS008M4A**	3YA3R99KE	118,030	107,230	96,880	87,010	77,670	69,170	60,670	53,070	46,090	39,110
	R*DS010M4A**	3YB3R11ME	137,240	125,000	113,310	102,150	91,540	81,900	72,250	63,600	55,590	47,580
	R*DS012M4A**	3YF3R14ME	164,290	149,300	134,910	121,160	108,090	96,270	84,440	74,010	64,530	55,050
	R*DS015M4A**	3YS3R16ME	182,170	166,110	150,640	135,840	121,760	108,820	95,880	84,190	73,360	62,530
95°	R*DS004M4A**	2YC3R51KE	58,120	51,990	46,270	40,990	36,120	31,910	27,690	24,150	21,070	17,990
	R*DS005M4A**	2YD3R59KE	66,190	59,520	53,230	47,380	41,990	37,300	32,610	28,670	25,240	21,810
	R*DS006M4A**	2YL3R73KE	85,770	77,130	69,220	61,970	55,350	49,540	43,720	38,610	33,890	29,170
	R*DS007M4A**	2YA3R82K0	96,330	86,780	77,840	69,510	61,790	54,950	48,110	42,180	36,790	31,400
	R*DS008M4A**	3YA3R99KE	113,560	103,100	93,070	83,490	74,410	66,100	57,790	50,320	43,450	36,580
	R*DS010M4A**	3YB3R11ME	132,020	120,180	108,850	98,010	87,710	78,280	68,850	60,340	52,460	44,580
	R*DS012M4A**	3YF3R14ME	157,990	143,490	129,550	116,220	103,570	92,060	80,540	70,360	61,080	51,800
	R*DS015M4A**	3YS3R16ME	175,430	159,930	145,000	130,660	117,000	104,410	91,810	80,380	69,700	59,020
100°	R*DS004M4A**	2YC3R51KE	–	49,730	44,190	39,080	34,390	30,350	26,300	22,940	20,020	17,100
	R*DS005M4A**	2YD3R59KE	–	57,000	50,950	45,280	40,090	35,600	31,110	27,360	24,130	20,900
	R*DS006M4A**	2YL3R73KE	–	74,060	66,400	59,410	53,010	47,410	41,800	36,890	32,350	27,810
	R*DS007M4A**	2YA3R82K0	–	83,240	74,610	66,560	59,110	52,520	45,920	40,180	35,000	29,820
	R*DS008M4A**	3YA3R99KE	–	98,970	89,270	79,950	71,110	62,980	54,850	47,520	40,710	33,900
	R*DS010M4A**	3YB3R11ME	–	115,330	104,330	93,810	83,790	74,570	65,340	56,980	49,210	41,440
	R*DS012M4A**	3YF3R14ME	–	137,660	124,140	111,220	98,940	87,750	76,550	66,550	57,470	48,390
	R*DS015M4A**	3YS3R16ME	–	153,790	139,390	125,500	112,240	99,980	87,710	76,490	66,010	55,530
110°	R*DS004M4A**	2YC3R51KE	–	–	40,120	35,370	31,040	27,360	23,670	20,640	18,050	15,460
	R*DS005M4A**	2YD3R59KE	–	–	46,440	41,210	36,430	32,350	28,260	24,890	22,030	19,170
	R*DS006M4A**	2YL3R73KE	–	–	60,770	54,250	48,310	43,120	37,920	33,390	29,220	25,050
	R*DS007M4A**	2YA3R82K0	–	–	68,140	60,670	53,760	47,650	41,540	36,230	31,440	26,650
	R*DS008M4A**	3YA3R99KE	–	–	81,630	72,840	64,440	56,650	48,860	41,740	35,110	28,480
	R*DS010M4A**	3YB3R11ME	–	–	95,100	85,160	75,680	66,850	58,020	49,960	42,390	34,820
	R*DS012M4A**	3YF3R14ME	–	–	113,250	101,060	89,460	78,820	68,180	58,620	49,840	41,060
	R*DS015M4A**	3YS3R16ME	–	–	128,190	115,220	102,730	91,100	79,460	68,700	58,530	48,360

Additional Compressor Cooling Required†

* Each asterisk represents a variable character based upon model, voltage, and vintage ordered. See page 4 for nomenclature.

† See page 50 for Additional Compressor Cooling Graph.

‡ Multiply capacity by .83 when used with 50 Hz power.

CAPACITY DATA (BTUH)

MEDIUM TEMPERATURE // R407C DISCUS // 60 HZ‡

Ambient Temp. (°F)	Model No.	Comp. Model No.	Suction Temperature (°F)									
			40°	35°	30°	25°	20°	15°	10°	5°	0°	-10°
90°	R*DS004M4A**	2YC3R51KE	58,780	52,370	46,420	40,970	35,990	31,720	27,450	23,880	20,790	17,700
	R*DS005M4A**	2YD3R59KE	66,890	59,870	53,330	47,270	41,720	36,950	32,180	28,210	24,770	21,330
	R*DS006M4A**	2YL3R73KE	87,160	77,920	69,350	61,490	54,300	48,150	41,990	36,860	32,370	27,880
	R*DS007M4A**	2YA3R82K0	97,120	87,110	77,800	69,190	61,270	54,350	47,430	41,490	36,180	30,870
	R*DS008M4A**	3YA3R99KE	110,880	100,920	91,620	82,920	74,780	67,310	59,830	52,850	46,070	39,290
	R*DS010M4A**	3YB3R11ME	129,000	117,690	107,180	97,340	88,090	79,610	71,130	63,200	55,430	47,660
	R*DS012M4A**	3YF3R14ME	154,530	140,660	127,640	115,410	103,880	93,390	82,900	73,310	64,170	55,030
	R*DS015M4A**	3YS3R16ME	168,480	153,780	139,880	126,770	114,400	102,990	91,580	81,020	70,900	60,780
95°	R*DS004M4A**	2YC3R51KE	56,680	50,420	44,620	39,300	34,440	30,290	26,140	22,710	19,760	16,810
	R*DS005M4A**	2YD3R59KE	64,590	57,750	51,340	45,430	40,040	35,410	30,780	26,960	23,670	20,380
	R*DS006M4A**	2YL3R73KE	84,360	75,270	66,890	59,190	52,210	46,270	40,320	35,410	31,180	26,950
	R*DS007M4A**	2YA3R82K0	93,920	84,150	75,060	66,650	58,920	52,170	45,420	39,660	34,490	29,320
	R*DS008M4A**	3YA3R99KE	107,140	97,570	88,610	80,180	72,220	64,800	57,370	50,300	43,360	36,420
	R*DS010M4A**	3YB3R11ME	124,620	113,770	103,640	94,100	85,070	76,650	68,230	60,190	52,260	44,330
	R*DS012M4A**	3YF3R14ME	149,210	135,900	123,360	111,510	100,320	89,960	79,590	69,980	60,710	51,440
	R*DS015M4A**	3YS3R16ME	162,850	148,780	135,440	122,760	110,730	99,500	88,270	77,730	67,480	57,230
100°	R*DS004M4A**	2YC3R51KE	–	48,550	42,870	37,680	32,940	28,920	24,890	21,600	18,770	15,940
	R*DS005M4A**	2YD3R59KE	–	55,690	49,450	43,660	38,400	33,920	29,440	25,760	22,630	19,500
	R*DS006M4A**	2YL3R73KE	–	72,680	64,460	56,970	50,180	44,450	38,720	34,050	30,070	26,090
	R*DS007M4A**	2YA3R82K0	–	81,260	72,390	64,170	56,630	50,050	43,460	37,830	32,810	27,790
	R*DS008M4A**	3YA3R99KE	–	94,310	85,640	77,390	69,560	62,120	54,670	47,470	40,280	33,090
	R*DS010M4A**	3YB3R11ME	–	109,920	100,090	90,780	81,890	73,450	65,010	56,820	48,650	40,480
	R*DS012M4A**	3YF3R14ME	–	131,250	119,080	107,540	96,560	86,270	75,970	66,210	56,750	47,290
	R*DS015M4A**	3YS3R16ME	–	143,950	131,090	118,770	106,980	95,860	84,730	74,100	63,700	53,300
110°	R*DS004M4A**	2YC3R51KE	–	–	39,600	34,630	30,140	26,370	22,590	19,540	16,960	14,380
	R*DS005M4A**	2YD3R59KE	–	–	45,860	40,360	35,370	31,170	26,960	23,560	20,700	17,840
	R*DS006M4A**	2YL3R73KE	–	–	59,860	52,750	46,370	41,080	35,780	31,600	28,130	24,660
	R*DS007M4A**	2YA3R82K0	–	–	67,230	59,390	52,190	45,920	39,650	34,300	29,540	24,780
	R*DS008M4A**	3YA3R99KE	–	–	79,570	71,540	63,740	56,080	48,410	40,740	33,020	25,300
	R*DS010M4A**	3YB3R11ME	–	–	92,680	83,600	74,790	66,120	57,440	48,790	40,000	31,210
	R*DS012M4A**	3YF3R14ME	–	–	110,340	99,130	88,300	77,860	67,410	57,220	47,150	37,080
	R*DS015M4A**	3YS3R16ME	–	–	122,340	110,540	99,040	87,890	76,740	65,770	54,810	43,850

Additional Compressor Cooling Required†

* Each asterisk represents a variable character based upon model, voltage, and vintage ordered. See page 4 for nomenclature.

† See page 50 for Additional Compressor Cooling Graph.

‡ Multiply capacity by .83 when used with 50 Hz power.

CAPACITY DATA (BTUH)

MEDIUM TEMPERATURE // R407F DISCUS // 60 HZ‡

Ambient Temp. (°F)	Model No.	Comp. Model No.	Suction Temperature (°F)									
			40°	35°	30°	25°	20°	15°	10°	5°	0°	-10°
90°	R*DS004M4A**	2YC3R51KE	60,630	54,300	48,380	42,910	37,870	33,500	29,120	25,410	22,160	18,910
	R*DS005M4A**	2YD3R59KE	68,970	62,060	55,570	49,500	43,900	39,030	34,150	30,020	26,400	22,780
	R*DS006M4A**	2YL3R73KE	89,110	80,200	72,020	64,540	57,670	51,650	45,620	40,320	35,400	30,480
	R*DS007M4A**	2YA3R82K0	100,210	90,330	81,080	72,460	64,470	57,400	50,320	44,150	38,570	32,990
	R*DS008M4A**	3YA3R99KE	118,030	107,230	96,880	87,010	77,670	69,170	60,670	53,070	46,090	39,110
	R*DS010M4A**	3YB3R11ME	137,240	125,000	113,310	102,150	91,540	81,900	72,250	63,600	55,590	47,580
	R*DS012M4A**	3YF3R14ME	164,290	149,300	134,910	121,160	108,090	96,270	84,440	74,010	64,530	55,050
	R*DS015M4A**	3YS3R16ME	182,170	166,110	150,640	135,840	121,760	108,820	95,880	84,190	73,360	62,530
95°	R*DS004M4A**	2YC3R51KE	58,120	51,990	46,270	40,990	36,120	31,910	27,690	24,150	21,070	17,990
	R*DS005M4A**	2YD3R59KE	66,190	59,520	53,230	47,380	41,990	37,300	32,610	28,670	25,240	21,810
	R*DS006M4A**	2YL3R73KE	85,770	77,130	69,220	61,970	55,350	49,540	43,720	38,610	33,890	29,170
	R*DS007M4A**	2YA3R82K0	96,330	86,780	77,840	69,510	61,790	54,950	48,110	42,180	36,790	31,400
	R*DS008M4A**	3YA3R99KE	113,560	103,100	93,070	83,490	74,410	66,100	57,790	50,320	43,450	36,580
	R*DS010M4A**	3YB3R11ME	132,020	120,180	108,850	98,010	87,710	78,280	68,850	60,340	52,460	44,580
	R*DS012M4A**	3YF3R14ME	157,990	143,490	129,550	116,220	103,570	92,060	80,540	70,360	61,080	51,800
	R*DS015M4A**	3YS3R16ME	175,430	159,930	145,000	130,660	117,000	104,410	91,810	80,380	69,700	59,020
100°	R*DS004M4A**	2YC3R51KE	–	49,730	44,190	39,080	34,390	30,350	26,300	22,940	20,020	17,100
	R*DS005M4A**	2YD3R59KE	–	57,000	50,950	45,280	40,090	35,600	31,110	27,360	24,130	20,900
	R*DS006M4A**	2YL3R73KE	–	74,060	66,400	59,410	53,010	47,410	41,800	36,890	32,350	27,810
	R*DS007M4A**	2YA3R82K0	–	83,240	74,610	66,560	59,110	52,520	45,920	40,180	35,000	29,820
	R*DS008M4A**	3YA3R99KE	–	98,970	89,270	79,950	71,110	62,980	54,850	47,520	40,710	33,900
	R*DS010M4A**	3YB3R11ME	–	115,330	104,330	93,810	83,790	74,570	65,340	56,980	49,210	41,440
	R*DS012M4A**	3YF3R14ME	–	137,660	124,140	111,220	98,940	87,750	76,550	66,550	57,470	48,390
	R*DS015M4A**	3YS3R16ME	–	153,790	139,390	125,500	112,240	99,980	87,710	76,490	66,010	55,530
110°	R*DS004M4A**	2YC3R51KE	–	–	40,120	35,370	31,040	27,360	23,670	20,640	18,050	15,460
	R*DS005M4A**	2YD3R59KE	–	–	46,440	41,210	36,430	32,350	28,260	24,890	22,030	19,170
	R*DS006M4A**	2YL3R73KE	–	–	60,770	54,250	48,310	43,120	37,920	33,390	29,220	25,050
	R*DS007M4A**	2YA3R82K0	–	–	68,140	60,670	53,760	47,650	41,540	36,230	31,440	26,650
	R*DS008M4A**	3YA3R99KE	–	–	81,630	72,840	64,440	56,650	48,860	41,740	35,110	28,480
	R*DS010M4A**	3YB3R11ME	–	–	95,100	85,160	75,680	66,850	58,020	49,960	42,390	34,820
	R*DS012M4A**	3YF3R14ME	–	–	113,250	101,060	89,460	78,820	68,180	58,620	49,840	41,060
	R*DS015M4A**	3YS3R16ME	–	–	128,190	115,220	102,730	91,100	79,460	68,700	58,530	48,360

Additional Compressor Cooling Required†

* Each asterisk represents a variable character based upon model, voltage, and vintage ordered. See page 4 for nomenclature.

† See page 50 for Additional Compressor Cooling Graph.

‡ Multiply capacity by .83 when used with 50 Hz power.

CAPACITY DATA (BTUH)

MEDIUM TEMPERATURE // R448A, R449A DISCUS // 60 HZ‡

Ambient Temp. (°F)	Model No.	Comp. Model No.	Suction Temperature (°F)									
			40°	35°	30°	25°	20°	15°	10°	5°	0°	-20°
90°	R*DS004M4A**	2YC3R51KE	61,260	55,110	49,300	43,900	38,870	34,460	30,050	26,270	22,940	19,610
	R*DS005M4A**	2YD3R59KE	69,690	62,990	56,630	50,640	45,060	40,150	35,240	31,040	27,330	23,620
	R*DS006M4A**	2YL3R73KE	90,110	81,370	73,290	65,820	58,910	52,760	46,610	41,130	36,010	30,890
	R*DS007M4A**	2YA3R82K0	101,250	91,670	82,630	74,120	66,180	59,060	51,930	45,650	39,930	34,210
	R*DS008M4A**	3YA3R99KE	118,270	108,060	98,360	89,140	80,390	72,250	64,110	56,490	49,140	41,790
	R*DS010M4A**	3YB3R11ME	137,580	126,020	115,070	104,640	94,690	85,460	76,220	67,550	59,140	50,730
	R*DS012M4A**	3YF3R14ME	164,930	150,670	137,060	124,050	111,640	100,210	88,780	78,320	68,440	58,560
	R*DS015M4A**	3YS3R16ME	183,380	168,020	153,200	138,990	125,390	112,710	100,020	88,280	77,150	66,020
95°	R*DS004M4A**	2YC3R51KE	58,830	52,860	47,250	42,020	37,150	32,890	28,630	25,020	21,850	18,680
	R*DS005M4A**	2YD3R59KE	67,000	60,520	54,360	48,570	43,190	38,460	33,720	29,700	26,170	22,640
	R*DS006M4A**	2YL3R73KE	86,850	78,390	70,580	63,340	56,670	50,720	44,760	39,450	34,500	29,550
	R*DS007M4A**	2YA3R82K0	97,500	88,230	79,480	71,250	63,560	56,660	49,750	43,700	38,160	32,620
	R*DS008M4A**	3YA3R99KE	114,080	104,210	94,820	85,850	77,300	69,260	61,220	53,610	46,230	38,850
	R*DS010M4A**	3YB3R11ME	132,690	121,520	110,900	100,750	91,050	81,930	72,800	64,150	55,720	47,290
	R*DS012M4A**	3YF3R14ME	158,970	145,200	132,000	119,380	107,320	96,110	84,890	74,570	64,750	54,930
	R*DS015M4A**	3YS3R16ME	176,940	162,120	147,820	134,030	120,810	108,420	96,020	84,480	73,430	62,380
100°	R*DS004M4A**	2YC3R51KE	–	50,640	45,200	40,130	35,440	31,340	27,240	23,800	20,790	17,780
	R*DS005M4A**	2YD3R59KE	–	58,040	52,110	46,500	41,310	36,770	32,220	28,390	25,060	21,730
	R*DS006M4A**	2YL3R73KE	–	75,390	67,830	60,850	54,390	48,640	42,880	37,750	32,960	28,170
	R*DS007M4A**	2YA3R82K0	–	84,770	76,310	68,350	60,910	54,240	47,570	41,690	36,350	31,010
	R*DS008M4A**	3YA3R99KE	–	100,330	91,230	82,470	74,090	66,130	58,160	50,560	43,090	35,620
	R*DS010M4A**	3YB3R11ME	–	116,940	106,620	96,730	87,230	78,200	69,170	60,520	52,040	43,560
	R*DS012M4A**	3YF3R14ME	–	139,650	126,840	114,570	102,810	91,810	80,810	70,540	60,780	51,020
	R*DS015M4A**	3YS3R16ME	–	156,200	142,400	129,030	116,170	104,050	91,930	80,530	69,620	58,710
110°	R*DS004M4A**	2YC3R51KE	–	–	41,140	36,420	32,070	28,330	24,590	21,470	18,780	16,090
	R*DS005M4A**	2YD3R59KE	–	–	47,620	42,430	37,640	33,500	29,360	25,890	22,920	19,950
	R*DS006M4A**	2YL3R73KE	–	–	62,300	55,800	49,800	44,440	39,080	34,300	29,840	25,380
	R*DS007M4A**	2YA3R82K0	–	–	69,870	62,470	55,550	49,350	43,150	37,690	32,730	27,770
	R*DS008M4A**	3YA3R99KE	–	–	83,870	75,490	67,370	59,500	51,620	43,930	36,340	28,750
	R*DS010M4A**	3YB3R11ME	–	–	97,680	88,210	79,050	70,150	61,240	52,580	43,970	35,360
	R*DS012M4A**	3YF3R14ME	–	–	116,250	104,560	93,300	82,620	71,940	61,830	52,080	42,330
	R*DS015M4A**	3YS3R16ME	–	–	131,430	118,910	106,720	95,130	83,530	72,470	61,740	51,010

20°F Superheat Maximum Additional Compressor Cooling Required†

* Each asterisk represents a variable character based upon model, voltage, and vintage ordered. See page 4 for nomenclature.

† See page 50 for Additional Compressor Cooling Graph.

‡ Multiply capacity by .83 when used with 50 Hz power.

CAPACITY DATA (BTUH)

EXTENDED RANGE MEDIUM TEMPERATURE // R454A SCROLL // 60 HZ‡

Ambient Temp. (°F)	Model No.	Comp. Model No.	Suction Temperature (°F)											
			40°	35°	30°	25°	20°	15°	10°	5°	0°	-5°	-10°	-20°
90°	R*OS004E4A**	YS26KAE	46,790	42,440	38,450	35,030	31,800	28,600	25,630	22,900	20,700	18,580	16,480	13,210
	R*OS005E4A**	YS30KAE	52,180	47,420	42,950	39,260	35,810	32,190	28,880	25,850	23,370	21,000	18,680	14,970
	R*OS006E4A**	YS33KAE	59,960	54,770	49,810	45,530	41,430	37,150	33,160	29,380	26,220	23,280	20,340	15,950
	R*OS007E4A**	YS40KAE	75,680	68,750	62,260	56,450	51,290	45,790	40,700	35,930	31,820	28,130	24,620	19,160
	R*OS008E4A**	YB51KAE	96,910	87,700	79,260	72,130	65,370	58,530	52,240	46,510	41,610	37,250	32,880	-
	R*OS009E4A**	YB56KAE	105,130	95,410	86,370	78,690	71,870	64,320	57,540	51,280	46,160	41,210	36,470	-
	R*OS010E4A**	YB68KAE	123,790	113,200	101,910	93,400	84,760	76,110	68,230	60,740	54,480	48,760	43,150	-
	R*OS013E4A**	YB83KAE	150,470	137,270	24,360	113,410	102,780	92,190	81,840	72,650	64,500	57,100	50,000	-
	R*OS015E4A**	YB100KAE	175,280	160,950	46,360	133,760	121,930	109,030	97,100	86,410	76,860	68,030	59,640	-
95°	R*OS004E4A**	YS26KAE	44,810	41,210	36,830	33,570	30,500	27,360	24,540	21,960	19,810	17,810	15,830	-
	R*OS005E4A**	YS30KAE	50,070	45,390	41,160	37,580	34,250	30,780	27,680	24,740	22,370	20,150	17,920	-
	R*OS006E4A**	YS33KAE	57,970	52,920	48,160	43,960	39,980	35,850	32,010	28,390	25,270	22,440	19,610	-
	R*OS007E4A**	YS40KAE	73,340	66,560	60,220	54,750	49,550	44,270	39,230	34,600	30,690	27,260	23,750	-
	R*OS008E4A**	YB51KAE	93,390	84,570	76,450	69,690	63,500	56,210	49,970	44,310	40,200	35,910	31,680	-
	R*OS009E4A**	YB56KAE	101,450	92,060	83,350	76,020	69,130	62,020	55,520	49,460	44,380	39,760	35,120	-
	R*OS010E4A**	YB68KAE	120,360	109,160	98,770	90,160	81,610	73,420	65,580	58,430	52,440	46,990	41,490	-
	R*OS013E4A**	YB83KAE	145,210	132,630	119,930	109,530	99,470	88,570	79,050	70,050	62,110	55,340	48,430	-
	R*OS015E4A**	YB100KAE	168,670	154,750	141,140	129,160	117,290	105,010	93,580	83,010	74,110	65,790	57,870	-
100°	R*OS004E4A**	YS26KAE	42,890	38,900	35,210	32,060	29,110	26,150	23,450	20,980	18,890	17,020	15,170	-
	R*OS005E4A**	YS30KAE	47,790	43,420	39,380	35,930	32,710	29,390	26,410	23,650	21,380	19,250	17,180	-
	R*OS006E4A**	YS33KAE	55,940	51,090	46,390	42,360	38,580	34,600	30,830	27,280	24,340	21,590	18,920	-
	R*OS007E4A**	YS40KAE	70,780	64,410	58,190	52,990	47,840	42,630	37,890	33,370	29,560	26,210	22,840	-
	R*OS008E4A**	YB51KAE	90,000	81,490	73,630	66,930	60,690	54,300	48,450	43,160	38,560	34,430	30,560	-
	R*OS009E4A**	YB56KAE	97,690	88,700	80,240	73,290	66,540	59,700	53,360	47,550	42,820	38,190	33,770	-
	R*OS010E4A**	YB68KAE	115,770	105,080	95,050	86,220	78,640	70,470	63,080	56,260	50,470	45,270	39,960	-
	R*OS013E4A**	YB83KAE	140,070	127,300	115,440	105,250	95,600	84,970	76,010	67,230	59,510	53,210	46,860	-
	R*OS015E4A**	YB100KAE	162,830	149,440	35,650	124,040	113,170	101,380	90,150	79,640	71,350	63,210	55,610	-
110°	R*OS004E4A**	YS26KAE	38,960	35,320	31,920	29,020	26,370	23,650	21,210	18,970	17,060	-	-	-
	R*OS005E4A**	YS30KAE	43,320	39,340	35,680	32,560	29,560	26,610	23,900	21,370	19,200	-	-	-
	R*OS006E4A**	YS33KAE	51,720	47,200	42,880	39,210	35,640	31,950	28,430	25,180	22,450	-	-	-
	R*OS007E4A**	YS40KAE	65,730	59,690	53,890	48,960	44,220	39,420	34,990	30,870	27,410	-	-	-
	R*OS008E4A**	YB51KAE	83,250	75,230	68,040	61,700	56,090	50,060	44,640	39,670	35,540	-	-	-
	R*OS009E4A**	YB56KAE	90,310	81,880	74,190	67,620	61,350	54,980	49,190	43,750	39,440	-	-	-
	R*OS010E4A**	YB68KAE	106,750	96,840	87,520	79,830	72,420	65,070	58,000	51,580	46,470	-	-	-
	R*OS013E4A**	YB83KAE	129,520	117,860	106,830	97,390	89,270	79,120	70,370	62,150	55,610	-	-	-
	R*OS015E4A**	YB100KAE	149,910	137,500	125,080	114,400	104,370	93,240	83,010	73,810	65,930	-	-	-

20°F Superheat Maximum Additional Compressor Cooling Required†

* Each asterisk represents a variable character based upon model, voltage, and vintage ordered. See page 4 for nomenclature.

† See page 50 for Additional Compressor Cooling Graph.

‡ Multiply capacity by .83 when used with 50 Hz power.

CAPACITY DATA (BTUH)

EXTENDED RANGE MEDIUM TEMPERATURE // R454C SCROLL // 60 HZ‡

Ambient Temp. (°F)	Model No.	Comp. Model No.	Suction Temperature (°F)											
			40°	35°	30°	25°	20°	15°	10°	5°	0°	-5°	-10°	-20°
90°	R*OS004E4A**	YS26KAE	37,370	33,670	30,200	27,310	24,630	22,000	19,570	17,380	15,530	13,840	12,250	-
	R*OS005E4A**	YS30KAE	41,870	37,700	33,960	30,720	27,810	24,820	22,110	19,700	17,600	15,700	13,900	-
	R*OS006E4A**	YS33KAE	52,120	47,390	42,970	39,080	35,360	31,540	28,050	24,730	21,880	19,310	16,840	-
	R*OS007E4A**	YS40KAE	64,970	58,880	53,020	48,010	43,330	38,550	34,100	29,960	26,460	23,260	20,310	-
	R*OS008E4A**	YB51KAE	81,370	73,830	66,820	60,660	54,980	49,290	43,950	39,100	34,870	30,980	27,280	-
	R*OS009E4A**	YB56KAE	88,860	80,590	73,080	66,640	60,560	54,390	48,580	43,220	38,580	34,510	30,380	-
	R*OS010E4A**	YB68KAE	105,440	95,930	86,890	79,150	71,880	64,450	57,700	51,280	45,760	40,840	36,060	-
	R*OS013E4A**	YB83KAE	130,930	118,910	107,740	97,540	87,910	78,200	69,080	60,870	54,040	47,630	41,740	
	R*OS015E4A**	YB100KAE	152,980	139,510	126,700	115,390	104,160	92,750	82,590	72,730	64,470	56,880	49,980	-
95°	R*OS004E4A**	YS26KAE	35,720	32,150	28,900	26,080	23,510	20,980	18,640	16,530	14,780	13,230	11,700	-
	R*OS005E4A**	YS30KAE	40,020	36,110	32,480	29,370	26,510	23,670	21,080	18,740	16,770	15,000	13,260	-
	R*OS006E4A**	YS33KAE	50,350	45,770	41,470	37,720	34,140	30,440	27,000	23,830	21,080	18,650	16,220	-
	R*OS007E4A**	YS40KAE	62,850	56,920	51,350	46,370	41,790	37,170	32,840	28,820	25,440	22,390	19,580	-
	R*OS008E4A**	YB51KAE	78,560	71,170	64,360	58,640	53,080	47,440	42,310	37,630	33,520	29,890	26,210	-
	R*OS009E4A**	YB56KAE	85,600	77,740	70,480	64,350	58,430	52,410	46,700	41,640	37,110	33,150	29,110	-
	R*OS010E4A**	YB68KAE	101,670	92,330	83,760	76,160	69,310	61,990	55,400	49,280	44,130	39,260	34,680	-
	R*OS013E4A**	YB83KAE	126,360	114,970	103,890	94,010	84,720	75,290	66,570	58,750	51,780	45,880	40,250	-
	R*OS015E4A**	YB100KAE	146,070	134,160	121,450	111,100	101,470	86,730	77,590	69,730	61,760	54,710	47,980	-
100°	R*OS004E4A**	YS26KAE	34,130	30,690	27,530	24,820	22,400	19,980	17,740	15,760	14,100	-	-	-
	R*OS005E4A**	YS30KAE	38,160	34,380	30,990	27,930	25,250	22,540	20,060	17,840	15,950	-	-	-
	R*OS006E4A**	YS33KAE	48,550	44,140	39,960	36,320	32,860	29,270	25,950	22,900	20,270	-	-	-
	R*OS007E4A**	YS40KAE	60,790	54,970	49,540	44,680	40,370	35,770	31,680	27,840	24,550	-	-	-
	R*OS008E4A**	YB51KAE	75,500	68,440	61,920	56,270	51,000	45,710	40,700	36,040	32,270	-	-	-
	R*OS009E4A**	YB56KAE	82,380	74,800	67,760	61,770	56,200	50,250	44,940	39,970	35,740	-	-	-
	R*OS010E4A**	YB68KAE	97,760	88,830	80,350	73,190	66,500	59,550	53,220	47,270	42,420	-	-	-
	R*OS013E4A**	YB83KAE	121,520	110,340	99,620	90,560	81,800	72,360	64,130	56,510	49,850	-	-	-
	R*OS015E4A**	YB100KAE	141,430	129,290	116,750	106,700	96,570	85,860	76,080	67,150	58,630	-	-	-
110°	R*OS004E4A**	YS26KAE	30,830	27,670	24,780	22,390	20,130	17,950	15,930	14,150	-	-	-	-
	R*OS005E4A**	YS30KAE	34,550	31,030	27,810	25,140	22,670	20,240	18,020	16,030	-	-	-	-
	R*OS006E4A**	YS33KAE	44,910	40,800	36,900	33,500	30,260	26,970	23,900	21,030	-	-	-	-
	R*OS007E4A**	YS40KAE	56,210	50,880	45,790	41,320	37,220	33,040	29,120	25,600	-	-	-	-
	R*OS008E4A**	YB51KAE	69,800	63,250	57,080	51,760	46,880	41,980	37,300	33,120	-	-	-	-
	R*OS009E4A**	YB56KAE	75,990	68,950	62,410	56,790	51,500	46,230	41,250	36,620	-	-	-	-
	R*OS010E4A**	YB68KAE	89,860	81,680	73,840	67,320	61,110	54,670	48,780	43,340	-	-	-	-
	R*OS013E4A**	YB83KAE	112,170	101,720	91,900	83,140	75,260	66,710	59,060	51,890	-	-	-	-
	R*OS015E4A**	YB100KAE	130,640	119,200	107,550	98,110	88,900	78,770	69,940	61,760	-	-	-	-

20°F Superheat Maximum Additional Compressor Cooling Required†

* Each asterisk represents a variable character based upon model, voltage, and vintage ordered. See page 4 for nomenclature.

† See page 50 for Additional Compressor Cooling Graph.

‡ Multiply capacity by .83 when used with 50 Hz power.

CAPACITY DATA (BTUH)

EXTENDED RANGE MEDIUM TEMPERATURE // R455A SCROLL // 60 HZ‡

Ambient Temp. (°F)	Model No.	Comp. Model No.	Suction Temperature (°F)											
			40°	35°	30°	25°	20°	15°	10°	5°	0°	-5°	-10°	-20°
90°	R*OS004E4A**	YS26KAE	40,870	36,840	33,150	29,990	27,060	24,090	21,440	19,040	17,070	15,250	-	-
	R*OS005E4A**	YS30KAE	45,830	41,350	37,260	33,860	30,480	27,280	24,300	21,600	19,330	17,290	-	-
	R*OS006E4A**	YS33KAE	54,810	49,900	45,180	41,130	37,210	33,170	29,410	25,990	23,010	20,310	-	-
	R*OS007E4A**	YS40KAE	68,180	61,710	55,690	50,400	45,410	40,290	35,580	31,290	27,690	24,420	-	-
	R*OS008E4A**	YB51KAE	87,220	78,920	71,100	64,460	58,080	51,900	46,170	40,940	36,520	33,510	-	-
	R*OS009E4A**	YB56KAE	95,210	86,220	77,830	70,880	64,080	57,390	51,100	45,340	40,550	36,080	-	-
	R*OS010E4A**	YB68KAE	113,220	102,580	92,750	84,440	76,370	68,400	60,810	53,970	48,260	43,040	-	-
	R*OS013E4A**	YB83KAE	137,660	125,190	112,930	102,530	92,820	82,570	73,000	64,250	56,820	50,380	-	-
	R*OS015E4A**	YB100KAE	160,260	146,740	132,620	120,910	109,970	97,940	87,050	76,680	68,000	60,270	-	-
95°	R*OS004E4A**	YS26KAE	39,080	35,240	31,670	28,580	25,800	23,020	20,490	18,160	16,260	14,520	-	-
	R*OS005E4A**	YS30KAE	43,830	39,540	35,640	32,270	29,110	26,010	23,160	20,600	18,440	16,490	-	-
	R*OS006E4A**	YS33KAE	52,910	48,130	43,590	39,590	35,860	31,980	28,340	25,020	23,190	19,570	-	-
	R*OS007E4A**	YS40KAE	65,830	59,620	53,720	48,690	43,760	38,830	34,410	30,230	26,650	23,510	-	-
	R*OS008E4A**	YB51KAE	84,060	76,020	68,540	62,130	56,060	49,990	44,410	39,430	35,180	31,240	-	-
	R*OS009E4A**	YB56KAE	91,620	83,000	74,840	68,130	61,660	55,240	49,130	43,670	38,920	34,340	-	-
	R*OS010E4A**	YB68KAE	109,040	98,710	89,160	80,990	73,530	65,560	58,480	51,860	46,390	41,300	-	-
	R*OS013E4A**	YB83KAE	132,460	120,560	108,920	98,970	89,210	79,390	70,240	61,890	54,960	48,460	-	-
	R*OS015E4A**	YB100KAE	154,730	140,580	128,010	117,060	105,740	94,130	83,680	73,730	65,550	57,980	-	-
100°	R*OS004E4A**	YS26KAE	37,280	33,600	30,150	27,230	24,550	21,910	19,490	17,280	15,340	-	-	-
	R*OS005E4A**	YS30KAE	41,770	37,680	33,950	30,680	27,720	24,750	22,030	19,560	17,550	-	-	-
	R*OS006E4A**	YS33KAE	51,050	46,400	41,970	38,120	34,550	30,750	27,260	24,030	21,280	-	-	-
	R*OS007E4A**	YS40KAE	63,590	57,560	51,780	46,850	42,170	37,470	33,060	29,040	25,680	-	-	-
	R*OS008E4A**	YB51KAE	80,820	73,060	65,730	59,660	53,770	48,060	42,750	37,800	33,750	-	-	-
	R*OS009E4A**	YB56KAE	88,220	79,840	72,120	65,540	59,420	53,050	47,200	42,040	35,950	-	-	-
	R*OS010E4A**	YB68KAE	104,960	95,000	85,580	77,730	70,460	62,950	56,120	49,810	44,430	-	-	-
	R*OS013E4A**	YB83KAE	127,480	116,090	104,650	94,920	85,710	76,410	67,660	59,540	52,840	-	-	-
	R*OS015E4A**	YB100KAE	149,040	136,190	123,240	112,150	101,800	90,540	80,490	71,050	63,160	-	-	-
110°	R*OS004E4A**	YS26KAE	33,720	30,260	27,170	24,510	22,060	19,650	17,470	-	-	-	-	-
	R*OS005E4A**	YS30KAE	37,720	33,970	30,570	27,620	24,880	22,210	19,770	-	-	-	-	-
	R*OS006E4A**	YS33KAE	47,070	42,810	38,710	35,110	31,760	28,300	25,040	-	-	-	-	-
	R*OS007E4A**	YS40KAE	59,030	53,360	47,930	43,210	38,890	34,540	30,440	-	-	-	-	-
	R*OS008E4A**	YB51KAE	74,500	67,310	60,500	54,900	49,450	44,160	39,160	-	-	-	-	-
	R*OS009E4A**	YB56KAE	81,180	73,630	66,340	60,280	54,410	48,730	43,280	-	-	-	-	-
	R*OS010E4A**	YB68KAE	96,390	87,360	78,770	71,400	64,680	57,840	51,370	-	-	-	-	-
	R*OS013E4A**	YB83KAE	117,630	106,930	96,570	87,430	78,880	70,340	62,280	-	-	-	-	-
	R*OS015E4A**	YB100KAE	136,900	125,240	113,210	103,130	93,330	83,490	74,120	-	-	-	-	-

20°F Superheat Maximum Additional Compressor Cooling Required†

* Each asterisk represents a variable character based upon model, voltage, and vintage ordered. See page 4 for nomenclature.

† See page 50 for Additional Compressor Cooling Graph.

‡ Multiply capacity by .83 when used with 50 Hz power.

CAPACITY DATA (BTUH)

EXTENDED RANGE MEDIUM TEMPERATURE // R404A SCROLL // 60 HZ‡

Ambient Temp. (°F)	Model No.	Comp. Model No.	Suction Temperature (°F)											
			40°	35°	30°	25°	20°	15°	10°	5°	0°	-5°	-10°	-20°
90°	R*OS004E4A**	YS26KAE	52,410	47,780	43,140	38,970	35,110	31,980	28,840	25,700	22,560	20,080	17,820	13,940
	R*OS005E4A**	YS30KAE	57,130	52,130	47,120	42,610	38,420	35,010	31,590	28,170	24,750	22,030	19,570	15,320
	R*OS006E4A**	YS33KAE	61,160	56,210	51,260	46,740	42,520	38,990	35,440	31,890	28,340	25,440	22,770	18,050
	R*OS007E4A**	YS40KAE	77,150	70,680	64,210	58,400	53,020	48,570	44,130	39,690	35,250	31,650	28,340	22,480
	R*OS008E4A**	YB51KAE	100,260	92,000	83,740	76,270	69,290	63,300	57,320	51,340	45,360	40,140	35,130	–
	R*OS009E4A**	YB56KAE	111,620	102,760	93,890	85,730	78,040	71,460	64,880	58,300	51,720	46,170	40,970	–
	R*OS010E4A**	YB68KAE	126,230	116,270	106,310	97,210	88,650	81,320	73,990	66,660	59,330	53,060	47,140	–
	R*OS013E4A**	YB83KAE	160,490	147,720	134,950	123,180	112,050	102,400	92,760	83,120	73,480	65,130	57,210	–
	R*OS015E4A**	YB100KAE	186,810	172,190	157,560	143,930	130,980	119,740	108,500	97,260	86,020	76,430	67,480	–
95°	R*OS004E4A**	YS26KAE	50,350	45,890	41,430	37,420	33,710	30,700	27,680	24,660	21,640	19,260	17,100	13,390
	R*OS005E4A**	YS30KAE	54,870	50,060	45,240	40,900	36,880	33,610	30,320	27,030	23,740	21,130	18,780	14,710
	R*OS006E4A**	YS33KAE	58,670	53,910	49,140	44,800	40,730	37,340	33,930	30,520	27,110	24,330	21,780	17,290
	R*OS007E4A**	YS40KAE	74,080	67,840	61,600	56,000	50,810	46,540	42,270	38,000	33,730	30,280	27,120	21,560
	R*OS008E4A**	YB51KAE	96,270	88,320	80,360	73,150	66,390	60,550	54,720	48,890	43,060	37,930	–	–
	R*OS009E4A**	YB56KAE	106,840	98,350	89,850	82,030	74,660	68,350	62,030	55,710	49,390	44,040	–	–
	R*OS010E4A**	YB68KAE	120,950	111,400	101,850	93,120	84,910	77,890	70,870	63,850	56,830	50,840	–	–
	R*OS013E4A**	YB83KAE	153,810	141,540	129,260	117,920	107,200	97,870	88,530	79,190	69,850	61,740	–	–
	R*OS015E4A**	YB100KAE	178,980	164,900	150,810	137,670	125,180	114,320	103,460	92,600	81,740	72,460	–	–
100°	R*OS004E4A**	YS26KAE	–	–	39,680	35,840	32,270	29,380	26,490	23,600	20,710	18,430	16,370	12,830
	R*OS005E4A**	YS30KAE	–	–	43,320	39,160	35,300	32,160	29,010	25,860	22,710	20,220	17,970	14,100
	R*OS006E4A**	YS33KAE	–	–	47,000	42,820	38,920	35,670	32,400	29,130	25,860	23,210	20,770	16,490
	R*OS007E4A**	YS40KAE	–	–	58,960	53,570	48,570	44,490	40,390	36,290	32,190	28,900	25,890	20,610
	R*OS008E4A**	YB51KAE	–	–	76,890	69,930	63,390	57,710	52,020	46,330	40,640	–	–	–
	R*OS009E4A**	YB56KAE	–	–	85,780	78,300	71,240	65,200	59,140	53,080	47,020	–	–	–
	R*OS010E4A**	YB68KAE	–	–	97,360	89,000	81,160	74,470	67,760	61,050	54,340	–	–	–
	R*OS013E4A**	YB83KAE	–	–	123,450	112,550	102,220	93,210	84,180	75,150	66,120	–	–	–
	R*OS015E4A**	YB100KAE	–	–	143,950	131,310	119,280	108,790	98,310	87,830	77,350	–	–	–
110°	R*OS004E4A**	YS26KAE	–	–	36,080	32,560	29,310	26,690	24,050	21,410	18,770	16,700	14,830	–
	R*OS005E4A**	YS30KAE	–	–	39,340	35,550	32,020	29,170	26,300	23,430	20,560	18,310	16,270	–
	R*OS006E4A**	YS33KAE	–	–	42,620	38,800	35,220	32,250	29,270	26,290	23,310	20,890	18,690	–
	R*OS007E4A**	YS40KAE	–	–	53,590	48,610	44,030	40,290	36,550	32,810	29,070	26,090	23,380	–
	R*OS008E4A**	YB51KAE	–	–	69,640	63,170	57,050	51,650	46,260	40,870	35,480	–	–	–
	R*OS009E4A**	YB56KAE	–	–	77,490	70,690	64,280	58,760	53,230	47,700	42,170	–	–	–
	R*OS010E4A**	YB68KAE	–	–	88,240	80,670	73,570	67,520	61,460	55,400	49,340	–	–	–
	R*OS013E4A**	YB83KAE	–	–	111,470	101,450	91,920	83,530	75,130	66,730	58,330	–	–	–
	R*OS015E4A**	YB100KAE	–	–	129,840	118,210	107,130	97,430	87,720	78,010	68,300	–	–	–

20°F Superheat Maximum Additional Compressor Cooling Required†

* Each asterisk represents a variable character based upon model, voltage, and vintage ordered. See page 4 for nomenclature.

† See page 50 for Additional Compressor Cooling Graph.

‡ Multiply capacity by .83 when used with 50 Hz power.

CAPACITY DATA (BTUH)

EXTENDED RANGE MEDIUM TEMPERATURE // R407A SCROLL // 60 HZ‡

Ambient Temp. (°F)	Model No.	Comp. Model No.	Suction Temperature (°F)											
			40°	35°	30°	25°	20°	15°	10°	5°	0°	-5°	-10°	-20°
90°	R*OS004E4A**	YS26KAE	46,850	42,620	38,390	34,690	31,310	28,590	25,860	23,130	20,400	18,180	16,100	12,250
	R*OS005E4A**	YS30KAE	47,770	45,200	42,630	39,170	35,310	32,230	29,160	26,090	23,020	20,520	18,170	13,740
	R*OS006E4A**	YS33KAE	52,720	48,010	43,290	39,160	35,380	32,320	29,250	26,180	23,110	20,600	18,240	13,870
	R*OS007E4A**	YS40KAE	59,660	55,850	52,040	48,220	44,420	40,840	37,270	33,700	30,130	26,910	23,910	18,640
	R*OS008E4A**	YB51KAE	93,650	85,130	76,600	69,170	62,340	56,440	50,530	44,620	38,710	33,100	27,380	–
	R*OS009E4A**	YB56KAE	104,760	95,690	86,620	78,120	70,030	63,170	56,300	49,430	42,560	37,050	32,200	–
	R*OS010E4A**	YB68KAE	120,130	109,800	99,460	90,240	81,670	74,220	66,770	59,320	51,870	44,980	38,030	–
	R*OS013E4A**	YB83KAE	152,630	139,320	126,010	113,560	101,710	91,580	81,430	71,280	61,130	52,860	45,390	–
	R*OS015E4A**	YB100KAE	179,120	163,570	148,010	133,380	119,450	107,590	95,710	83,830	71,950	62,430	53,990	–
95°	R*OS004E4A**	YS26KAE	45,380	41,240	37,100	33,520	30,240	27,610	24,960	22,310	19,660	17,510	15,500	11,770
	R*OS005E4A**	YS30KAE	46,560	43,540	40,510	37,810	34,070	31,120	28,150	25,180	22,210	19,800	17,520	13,200
	R*OS006E4A**	YS33KAE	51,050	46,450	41,840	37,830	34,160	31,190	28,220	25,250	22,280	19,840	17,560	13,320
	R*OS007E4A**	YS40KAE	58,300	54,550	50,790	47,040	43,310	39,810	36,310	32,810	29,310	26,180	23,260	18,100
	R*OS008E4A**	YB51KAE	90,430	82,270	74,100	66,930	60,300	54,410	48,530	42,650	36,770	31,050	–	–
	R*OS009E4A**	YB56KAE	101,190	92,300	83,410	75,140	67,290	60,660	54,040	47,420	40,800	35,590	–	–
	R*OS010E4A**	YB68KAE	116,030	106,090	96,140	87,310	79,060	71,760	64,460	57,160	49,860	42,940	–	–
	R*OS013E4A**	YB83KAE	147,410	134,380	121,340	109,220	97,670	87,840	78,010	68,180	58,350	50,400	–	–
	R*OS015E4A**	YB100KAE	172,980	157,730	142,480	128,200	114,640	103,140	91,650	80,160	68,670	59,580	–	–
100°	R*OS004E4A**	YS26KAE	–	–	35,800	32,330	29,160	26,610	24,050	21,490	18,930	16,850	14,900	–
	R*OS005E4A**	YS30KAE	–	–	38,500	35,850	32,310	29,490	26,680	23,870	21,060	18,770	16,600	–
	R*OS006E4A**	YS33KAE	–	–	40,360	36,480	32,930	30,050	27,180	24,310	21,440	19,090	16,880	–
	R*OS007E4A**	YS40KAE	–	–	49,540	45,860	42,220	38,810	35,380	31,950	28,520	25,450	22,590	–
	R*OS008E4A**	YB51KAE	–	–	71,500	64,580	58,120	52,270	46,400	40,530	34,660	–	–	–
	R*OS009E4A**	YB56KAE	–	–	80,130	72,120	64,530	58,170	51,820	45,470	39,120	–	–	–
	R*OS010E4A**	YB68KAE	–	–	92,790	84,340	76,400	69,240	62,090	54,940	47,790	–	–	–
	R*OS013E4A**	YB83KAE	–	–	116,550	104,760	93,550	84,070	74,570	65,070	55,570	–	–	–
	R*OS015E4A**	YB100KAE	–	–	136,850	122,940	109,770	98,690	87,610	76,530	65,450	–	–	–
110°	R*OS004E4A**	YS26KAE	–	–	33,230	29,960	27,010	24,640	22,250	19,860	17,470	15,530	–	–
	R*OS005E4A**	YS30KAE	–	–	35,100	33,000	29,740	27,170	24,590	22,010	19,430	17,320	–	–
	R*OS006E4A**	YS33KAE	–	–	37,410	33,790	30,480	27,820	25,140	22,460	19,780	17,590	–	–
	R*OS007E4A**	YS40KAE	–	–	47,170	43,620	40,110	36,810	33,520	30,230	26,940	23,990	–	–
	R*OS008E4A**	YB51KAE	–	–	66,030	59,550	53,400	47,560	41,720	35,880	30,040	–	–	–
	R*OS009E4A**	YB56KAE	–	–	73,480	66,020	59,010	53,250	47,500	41,750	36,000	–	–	–
	R*OS010E4A**	YB68KAE	–	–	86,010	78,310	70,980	64,110	57,250	50,390	43,530	–	–	–
	R*OS013E4A**	YB83KAE	–	–	106,680	95,620	85,190	76,430	67,680	58,930	50,180	–	–	–
	R*OS015E4A**	YB100KAE	–	–	125,280	112,240	99,930	89,750	79,560	69,370	59,180	–	–	–

20°F Superheat Maximum Additional Compressor Cooling Required†

* Each asterisk represents a variable character based upon model, voltage, and vintage ordered. See page 4 for nomenclature.

† See page 50 for Additional Compressor Cooling Graph.

‡ Multiply capacity by .83 when used with 50 Hz power.

CAPACITY DATA (BTUH)

EXTENDED RANGE MEDIUM TEMPERATURE // R407C SCROLL // 60 HZ‡

Ambient Temp. (°F)	Model No.	Comp. Model No.	Suction Temperature (°F)											
			40°	35°	30°	25°	20°	15°	10°	5°	0°	-5°	-10°	-20°
90°	R*OS004E4A**	YS26KAE	45,250	41,300	37,350	33,700	30,230	28,630	27,020	25,410	23,800	17,940	–	–
	R*OS005E4A**	YS30KAE	46,010	43,240	40,460	37,120	33,260	31,480	29,710	27,940	26,170	19,750	–	–
	R*OS006E4A**	YS33KAE	52,590	47,890	43,180	39,060	35,290	33,640	31,980	30,320	28,660	23,050	–	–
	R*OS007E4A**	YS40KAE	59,510	55,710	51,910	48,100	44,310	42,460	40,620	38,780	36,940	30,060	–	–
	R*OS008E4A**	YB51KAE	90,480	82,660	74,840	67,470	60,450	57,240	54,020	50,800	47,580	36,450	–	–
	R*OS009E4A**	YB56KAE	101,960	92,540	83,110	74,780	67,100	63,710	60,310	56,910	53,510	41,990	–	–
	R*OS010E4A**	YB68KAE	116,320	106,780	97,230	88,150	79,490	75,550	71,590	67,630	63,670	50,130	–	–
	R*OS013E4A**	YB83KAE	147,900	133,650	119,400	106,840	95,290	90,220	85,130	80,040	74,950	57,780	–	–
	R*OS015E4A**	YB100KAE	–	–	–	–	–	–	–	–	–	–	–	–
95°	R*OS004E4A**	YS26KAE	44,030	40,190	36,350	32,820	29,440	27,880	26,300	24,720	23,140	–	–	–
	R*OS005E4A**	YS30KAE	45,070	41,900	38,720	36,110	32,360	30,630	28,900	27,170	25,440	–	–	–
	R*OS006E4A**	YS33KAE	50,920	46,330	41,740	37,740	34,080	32,490	30,880	29,270	27,660	–	–	–
	R*OS007E4A**	YS40KAE	58,160	54,410	50,660	46,920	43,200	41,390	39,590	37,790	35,990	–	–	–
	R*OS008E4A**	YB51KAE	88,230	80,440	72,650	65,310	58,330	55,130	51,940	48,750	45,560	–	–	–
	R*OS009E4A**	YB56KAE	99,080	89,870	80,660	72,550	65,060	61,750	58,420	55,090	51,760	–	–	–
	R*OS010E4A**	YB68KAE	113,480	103,990	94,500	85,590	77,100	73,230	69,370	65,510	61,650	–	–	–
	R*OS013E4A**	YB83KAE	142,990	129,140	115,280	103,090	91,850	86,890	81,930	76,970	72,010	–	–	–
	R*OS015E4A**	YB100KAE	–	–	–	–	–	–	–	–	–	–	–	–
100°	R*OS004E4A**	YS26KAE	–	–	35,350	31,930	28,640	27,100	25,550	24,000	22,450	–	–	–
	R*OS005E4A**	YS30KAE	–	–	37,090	34,530	30,960	29,290	27,620	25,950	24,280	–	–	–
	R*OS006E4A**	YS33KAE	–	–	40,260	36,390	32,850	31,290	29,740	28,190	26,640	–	–	–
	R*OS007E4A**	YS40KAE	–	–	49,420	45,750	42,120	40,360	38,590	36,820	35,050	–	–	–
	R*OS008E4A**	YB51KAE	–	–	70,270	62,980	56,040	52,870	49,710	46,550	43,390	–	–	–
	R*OS009E4A**	YB56KAE	–	–	78,200	70,300	63,000	59,740	56,480	53,220	49,960	–	–	–
	R*OS010E4A**	YB68KAE	–	–	91,730	82,980	74,670	70,910	67,150	63,390	59,630	–	–	–
	R*OS013E4A**	YB83KAE	–	–	111,180	99,330	88,390	83,560	78,720	73,880	69,040	–	–	–
	R*OS015E4A**	YB100KAE	–	–	–	–	–	–	–	–	–	–	–	–
110°	R*OS004E4A**	YS26KAE	–	–	33,430	30,150	27,010	25,510	23,990	22,470	20,950	–	–	–
	R*OS005E4A**	YS30KAE	–	–	34,450	32,400	29,010	27,410	25,810	24,210	22,610	–	–	–
	R*OS006E4A**	YS33KAE	–	–	37,320	33,710	30,400	28,960	27,510	26,060	24,610	–	–	–
	R*OS007E4A**	YS40KAE	–	–	47,050	43,510	40,010	38,320	36,620	34,920	33,220	–	–	–
	R*OS008E4A**	YB51KAE	–	–	65,080	57,880	51,070	48,000	44,910	41,820	38,730	–	–	–
	R*OS009E4A**	YB56KAE	–	–	73,300	65,780	58,810	55,680	52,540	49,400	46,260	–	–	–
	R*OS010E4A**	YB68KAE	–	–	86,070	77,680	69,750	66,220	62,670	59,120	55,570	–	–	–
	R*OS013E4A**	YB83KAE	–	–	103,010	91,810	81,470	76,830	72,190	67,550	62,910	–	–	–
	R*OS015E4A**	YB100KAE	–	–	–	–	–	–	–	–	–	–	–	–

20°F Superheat Maximum

* Each asterisk represents a variable character based upon model, voltage, and vintage ordered. See page 4 for nomenclature.

† See page 50 for Additional Compressor Cooling Graph.

‡ Multiply capacity by .83 when used with 50 Hz power.

CAPACITY DATA (BTUH)

EXTENDED RANGE MEDIUM TEMPERATURE // R407F SCROLL // 60 HZ‡

Ambient Temp. (°F)	Model No.	Comp. Model No.	Suction Temperature (°F)											
			40°	35°	30°	25°	20°	15°	10°	5°	0°	-5°	-10°	-20°
90°	R*OS004E4A**	YS26KAE	–	–	–	–	–	–	–	–	–	–	–	–
	R*OS005E4A**	YS30KAE	–	–	–	–	–	–	–	–	–	–	–	–
	R*OS006E4A**	YS33KAE	–	–	–	–	–	–	–	–	–	–	–	–
	R*OS007E4A**	YS40KAE	–	–	–	–	–	–	–	–	–	–	–	–
	R*OS008E4A**	YB51KAE	93,650	85,130	76,600	69,170	62,340	59,270	56,190	53,110	50,030	38,710	33,100	–
	R*OS009E4A**	YB56KAE	104,760	95,690	86,620	78,120	70,030	66,330	62,630	58,930	55,230	42,560	37,050	–
	R*OS010E4A**	YB68KAE	120,130	109,800	99,460	90,240	81,670	77,780	73,890	70,000	66,110	51,870	44,980	–
	R*OS013E4A**	YB83KAE	152,630	139,320	126,010	113,560	101,710	96,280	90,850	85,420	79,990	61,130	52,860	–
	R*OS015E4A**	YB100KAE	179,120	163,570	148,010	133,380	119,450	113,070	106,680	100,290	93,900	71,950	62,430	–
95°	R*OS004E4A**	YS26KAE	–	–	–	–	–	–	–	–	–	–	–	–
	R*OS005E4A**	YS30KAE	–	–	–	–	–	–	–	–	–	–	–	–
	R*OS006E4A**	YS33KAE	–	–	–	–	–	–	–	–	–	–	–	–
	R*OS007E4A**	YS40KAE	–	–	–	–	–	–	–	–	–	–	–	–
	R*OS008E4A**	YB51KAE	90,430	82,270	74,100	66,930	60,300	57,280	54,240	51,200	48,160	36,770	–	–
	R*OS009E4A**	YB56KAE	101,190	92,300	83,410	75,140	67,290	63,720	60,140	56,560	52,980	40,800	–	–
	R*OS010E4A**	YB68KAE	116,030	106,090	96,140	87,310	79,060	75,270	71,490	67,710	63,930	49,860	–	–
	R*OS013E4A**	YB83KAE	147,410	134,380	121,340	109,220	97,670	92,410	87,130	81,850	76,570	58,350	–	–
	R*OS015E4A**	YB100KAE	172,980	157,730	142,480	128,200	114,640	108,450	102,260	96,070	89,880	68,670	–	–
100°	R*OS004E4A**	YS26KAE	–	–	–	–	–	–	–	–	–	–	–	–
	R*OS005E4A**	YS30KAE	–	–	–	–	–	–	–	–	–	–	–	–
	R*OS006E4A**	YS33KAE	–	–	–	–	–	–	–	–	–	–	–	–
	R*OS007E4A**	YS40KAE	–	–	–	–	–	–	–	–	–	–	–	–
	R*OS008E4A**	YB51KAE	–	–	71,500	64,580	58,120	55,130	52,130	49,130	46,130	–	–	–
	R*OS009E4A**	YB56KAE	–	–	80,130	72,120	64,530	61,090	57,640	54,190	50,740	–	–	–
	R*OS010E4A**	YB68KAE	–	–	92,790	84,340	76,400	72,740	69,060	65,380	61,700	–	–	–
	R*OS013E4A**	YB83KAE	–	–	116,550	104,760	93,550	88,440	83,340	78,240	73,140	–	–	–
	R*OS015E4A**	YB100KAE	–	–	136,850	122,940	109,770	103,770	97,780	91,790	85,800	–	–	–
110°	R*OS004E4A**	YS26KAE	–	–	–	–	–	–	–	–	–	–	–	–
	R*OS005E4A**	YS30KAE	–	–	–	–	–	–	–	–	–	–	–	–
	R*OS006E4A**	YS33KAE	–	–	–	–	–	–	–	–	–	–	–	–
	R*OS007E4A**	YS40KAE	–	–	–	–	–	–	–	–	–	–	–	–
	R*OS008E4A**	YB51KAE	–	–	66,030	59,550	53,400	–	–	–	–	–	–	–
	R*OS009E4A**	YB56KAE	–	–	73,480	66,020	59,010	–	–	–	–	–	–	–
	R*OS010E4A**	YB68KAE	–	–	86,010	78,310	70,980	–	–	–	–	–	–	–
	R*OS013E4A**	YB83KAE	–	–	106,680	95,620	85,190	–	–	–	–	–	–	–
	R*OS015E4A**	YB100KAE	–	–	125,280	112,240	99,930	–	–	–	–	–	–	–

20°F Superheat Maximum

* Each asterisk represents a variable character based upon model, voltage, and vintage ordered. See page 4 for nomenclature.

† See page 50 for Additional Compressor Cooling Graph.

‡ Multiply capacity by .83 when used with 50 Hz power.

CAPACITY DATA (BTUH)

EXTENDED RANGE MEDIUM TEMPERATURE // R448A, R449A SCROLL // 60 HZ‡

Ambient Temp. (°F)	Model No.	Comp. Model No.	Suction Temperature (°F)											
			40°	35°	30°	25°	20°	15°	10°	5°	0°	-5°	-10°	-20°
90°	R*OS004E4A**	YS26KAE	47,250	44,050	40,840	36,950	33,300	30,200	27,110	24,020	20,930	18,350	15,940	11,480
	R*OS005E4A**	YS30KAE	48,860	46,450	44,030	40,510	36,460	33,070	29,690	26,310	22,930	20,110	17,470	13,450
	R*OS006E4A**	YS33KAE	54,130	49,210	44,290	40,100	36,340	33,400	30,440	27,480	24,520	22,130	19,850	15,410
	R*OS007E4A**	YS40KAE	61,210	57,210	53,200	49,320	45,550	42,120	38,700	35,280	31,860	28,800	25,940	20,580
	R*OS008E4A**	YB51KAE	93,930	85,870	77,810	70,370	63,330	57,180	51,040	44,900	38,760	33,370	28,250	–
	R*OS009E4A**	YB56KAE	106,260	96,740	87,220	78,830	71,070	64,480	57,900	51,320	44,740	38,860	33,130	–
	R*OS010E4A**	YB68KAE	119,290	109,700	100,100	91,000	82,290	74,600	66,900	59,200	51,500	44,850	38,570	–
	R*OS013E4A**	YB83KAE	160,200	143,940	127,670	114,120	101,990	92,000	82,020	72,040	62,060	52,750	43,090	–
	R*OS015E4A**	YB100KAE	188,270	169,230	150,190	134,260	119,990	108,280	96,570	84,860	73,150	62,340	51,220	–
95°	R*OS004E4A**	YS26KAE	45,050	42,260	39,460	35,700	32,160	29,170	26,170	23,170	20,170	17,670	15,350	10,670
	R*OS005E4A**	YS30KAE	47,630	44,740	41,840	39,100	35,180	31,930	28,660	25,390	22,120	19,400	16,850	13,520
	R*OS006E4A**	YS33KAE	52,410	47,610	42,800	38,740	35,080	32,220	29,360	26,500	23,640	21,310	19,110	14,820
	R*OS007E4A**	YS40KAE	59,810	55,870	51,920	48,120	44,420	41,070	37,710	34,350	30,990	28,020	25,240	19,990
	R*OS008E4A**	YB51KAE	90,700	82,990	75,270	68,090	61,260	55,150	49,040	42,930	36,820	31,300	–	–
	R*OS009E4A**	YB56KAE	102,640	93,320	83,990	75,820	68,290	61,940	55,590	49,240	42,890	37,330	–	–
	R*OS010E4A**	YB68KAE	115,220	105,990	96,750	88,050	79,660	72,120	64,580	57,040	49,500	42,810	–	–
	R*OS013E4A**	YB83KAE	154,720	138,830	122,940	109,760	97,940	88,280	78,600	68,920	59,240	50,300	–	–
	R*OS015E4A**	YB100KAE	181,810	163,200	144,580	129,050	115,160	103,840	92,500	81,160	69,820	59,490	–	–
100°	R*OS004E4A**	YS26KAE	–	–	38,210	34,520	31,030	28,030	25,040	22,050	19,060	16,530	14,170	–
	R*OS005E4A**	YS30KAE	–	–	39,900	37,160	33,380	30,190	26,990	23,790	20,590	17,880	15,320	–
	R*OS006E4A**	YS33KAE	–	–	40,820	36,960	33,490	30,770	28,060	25,350	22,640	20,440	18,330	–
	R*OS007E4A**	YS40KAE	–	–	50,040	46,390	42,860	39,640	36,430	33,220	30,010	27,160	24,480	–
	R*OS008E4A**	YB51KAE	–	–	73,940	66,710	59,790	53,560	47,320	41,080	34,840	–	–	–
	R*OS009E4A**	YB56KAE	–	–	82,380	74,590	67,260	60,670	54,060	47,450	40,840	–	–	–
	R*OS010E4A**	YB68KAE	–	–	95,080	86,360	77,930	70,340	62,750	55,160	47,570	–	–	–
	R*OS013E4A**	YB83KAE	–	–	118,250	105,660	94,200	84,210	74,210	64,210	54,210	–	–	–
	R*OS015E4A**	YB100KAE	–	–	139,070	124,210	110,730	99,020	87,320	75,620	63,920	–	–	–
110°	R*OS004E4A**	YS26KAE	–	–	35,490	31,930	28,580	25,660	22,750	19,840	16,930	14,430	–	–
	R*OS005E4A**	YS30KAE	–	–	36,400	34,140	30,560	27,490	24,420	21,350	18,280	15,620	–	–
	R*OS006E4A**	YS33KAE	–	–	37,230	33,710	30,540	28,070	25,600	23,130	20,660	18,640	–	–
	R*OS007E4A**	YS40KAE	–	–	46,900	43,460	40,140	37,130	34,120	31,110	28,100	25,430	–	–
	R*OS008E4A**	YB51KAE	–	–	69,000	61,970	55,160	48,880	42,590	36,300	30,010	–	–	–
	R*OS009E4A**	YB56KAE	–	–	76,900	69,640	62,690	56,020	49,340	42,660	35,980	–	–	–
	R*OS010E4A**	YB68KAE	–	–	89,060	80,760	72,670	65,260	57,850	50,440	43,030	–	–	–
	R*OS013E4A**	YB83KAE	–	–	108,330	96,510	85,590	75,400	65,220	55,040	44,860	–	–	–
	R*OS015E4A**	YB100KAE	–	–	127,450	113,480	100,580	88,690	76,780	64,870	52,960	–	–	–

20°F Superheat Maximum

* Each asterisk represents a variable character based upon model, voltage, and vintage ordered. See page 4 for nomenclature.

† See page 50 for Additional Compressor Cooling Graph.

‡ Multiply capacity by .83 when used with 50 Hz power.

CAPACITY DATA (BTUH)

EXTENDED RANGE MEDIUM TEMPERATURE // R454A BITZER // 60 HZ‡

Ambient Temp. (°F)	Model No.	Comp. Model No.	Suction Temperature (°F)											
			40°	35°	30°	25°	20°	15°	10°	5°	0°	-5°	-10°	-20°
90°	R*BS003M4A**	2DES-3	50,522	42,436	37,697	33,633	30,359	26,827	24,752	22,231	20,426	18,066	15,582	11,234
	R*BS004M4A**	2CES-4	62,505	56,605	52,050	46,775	42,629	38,007	33,993	29,984	26,420	23,020	19,538	12,689
	R*BS005M4A**	4FES-5	68,124	61,734	56,628	50,955	46,404	41,391	37,044	32,646	28,701	25,073	21,924	15,946
	R*BS006M4A**	4EES-6	90,017	81,324	74,395	66,571	60,385	53,547	47,793	42,090	36,706	31,920	27,791	20,068
	R*BS007M4A**	4DES-7	101,505	91,625	83,955	75,220	68,367	60,648	54,135	47,659	41,670	36,206	31,500	22,669
	R*BS008M4A**	4CES-9	124,689	112,972	103,863	93,278	85,217	75,833	67,838	59,930	52,621	46,103	40,433	29,539
	R*BS010M4A**	4TES-12	149,448	135,133	123,798	111,049	100,816	89,566	79,899	70,064	61,137	53,038	46,067	32,891
	R*BS012M4A**	4PES-15	173,285	156,048	142,713	127,272	115,486	101,954	90,231	79,038	68,352	59,070	50,562	35,335
	R*BS015M4A**	4NES-20	200,398	181,226	166,193	149,300	135,239	120,195	107,044	93,942	83,145	73,622	64,094	44,216
95°	R*BS003M4A**	2DES-3	50,920	45,392	40,331	36,124	32,725	29,038	25,718	22,634	19,745	17,140	14,691	10,515
	R*BS004M4A**	2CES-4	60,140	54,420	49,938	44,845	40,862	36,346	32,469	28,577	25,099	21,870	18,608	12,085
	R*BS005M4A**	4FES-5	65,412	59,227	54,337	48,792	44,357	39,543	35,284	31,058	27,220	23,727	20,880	15,187
	R*BS006M4A**	4EES-6	86,599	78,142	71,396	63,731	57,753	51,117	45,598	40,034	34,828	30,145	26,468	19,112
	R*BS007M4A**	4DES-7	97,760	88,106	80,585	72,004	65,237	57,901	51,572	45,333	39,469	34,205	30,000	21,590
	R*BS008M4A**	4CES-9	119,940	108,581	99,667	89,564	81,448	72,588	64,838	56,955	49,144	43,695	38,508	28,133
	R*BS010M4A**	4TES-12	143,398	129,520	118,627	106,159	96,230	85,384	75,950	66,689	58,017	50,148	43,873	31,325
	R*BS012M4A**	4PES-15	166,148	149,532	136,435	121,676	109,964	96,917	85,743	74,757	64,776	55,406	48,154	33,652
	R*BS015M4A**	4NES-20	192,666	174,010	159,018	142,690	129,354	114,655	101,943	89,593	80,349	70,508	61,042	42,111
100°	R*BS003M4A**	2DES-3	48,884	43,576	38,718	34,679	31,416	27,877	24,690	21,729	18,955	16,454	14,103	10,094
	R*BS004M4A**	2CES-4	57,734	52,243	47,940	43,051	39,228	34,892	31,170	27,434	24,095	20,995	17,864	11,601
	R*BS005M4A**	4FES-5	62,795	56,858	52,164	46,840	42,583	37,961	33,873	29,816	26,131	22,777	20,045	14,579
	R*BS006M4A**	4EES-6	83,135	75,016	68,541	61,182	55,443	49,072	43,774	38,433	33,434	28,940	25,409	18,348
	R*BS007M4A**	4DES-7	93,850	84,581	77,362	69,123	62,628	55,585	49,509	43,520	37,890	32,837	28,800	20,726
	R*BS008M4A**	4CES-9	115,143	104,238	95,680	85,981	78,190	69,684	62,244	54,676	47,178	41,948	36,968	27,007
	R*BS010M4A**	4TES-12	137,662	124,339	113,882	101,913	92,380	81,969	72,912	64,021	55,697	48,142	42,118	30,072
	R*BS012M4A**	4PES-15	159,502	143,551	130,977	116,809	105,566	93,041	82,313	71,767	62,185	53,189	46,228	32,306
	R*BS015M4A**	4NES-20	184,960	167,050	152,657	136,982	124,180	110,069	97,865	86,010	77,135	67,687	58,600	40,426
110°	R*BS003M4A**	2DES-3	44,484	39,654	35,233	31,558	28,589	25,368	22,468	19,773	17,249	14,974	12,834	9,186
	R*BS004M4A**	2CES-4	52,538	47,542	43,626	39,177	35,697	31,752	28,365	24,965	21,926	19,105	16,256	10,557
	R*BS005M4A**	4FES-5	57,144	51,741	47,469	42,624	38,750	34,545	30,824	27,132	23,779	20,727	18,241	13,267
	R*BS006M4A**	4EES-6	75,653	68,265	62,372	55,676	50,453	44,656	39,835	34,974	30,425	26,335	23,122	16,696
	R*BS007M4A**	4DES-7	85,404	76,969	70,399	62,902	56,991	50,583	45,053	39,603	34,480	29,882	26,208	18,861
	R*BS008M4A**	4CES-9	104,780	94,857	87,069	78,243	71,153	63,413	56,642	49,756	42,932	38,172	33,641	24,577
	R*BS010M4A**	4TES-12	125,273	113,149	103,632	92,741	84,066	74,592	66,350	58,259	50,684	43,809	38,328	27,366
	R*BS012M4A**	4PES-15	145,147	130,631	119,189	106,296	96,065	84,667	74,905	65,308	56,588	48,402	42,068	29,399
	R*BS015M4A**	4NES-20	168,313	152,015	138,918	124,654	113,004	100,163	89,057	78,269	70,193	61,596	53,326	36,788

20°F Superheat Maximum

* Each asterisk represents a variable character based upon model, voltage, and vintage ordered. See page 4 for nomenclature.

† See page 50 for Additional Compressor Cooling Graph.

‡ Multiply capacity by .83 when used with 50 Hz power.

CAPACITY DATA (BTUH)

EXTENDED RANGE MEDIUM TEMPERATURE // R454C BITZER // 60 HZ‡

Ambient Temp. (°F)	Model No.	Comp. Model No.	Suction Temperature (°F)											
			40°	35°	30°	25°	20°	15°	10°	5°	0°	-5°	-10°	-20°
90°	R*BS003M4A**	2DES-3	44,050	39,630	35,550	32,040	28,760	25,430	22,410	19,610	17,220	15,050	12,860	9,410
	R*BS004M4A**	2CES-4	54,020	48,810	43,940	39,730	35,840	31,720	28,140	24,750	21,850	19,180	16,570	12,250
	R*BS005M4A**	4FES-5	58,750	52,990	47,760	43,210	38,950	34,590	30,570	26,880	23,730	20,820	17,980	13,250
	R*BS006M4A**	4EES-6	78,120	70,260	63,130	56,590	50,780	44,980	39,600	34,630	30,390	26,550	22,710	16,640
	R*BS007M4A**	4DES-7	88,140	79,310	70,820	63,970	57,360	50,800	44,730	39,180	34,280	29,830	25,820	18,900
	R*BS008M4A**	4CES-9	107,720	97,360	87,620	79,260	71,570	63,590	56,160	49,460	43,710	38,330	33,060	24,550
	R*BS010M4A**	4TES-12	128,020	115,530	103,640	93,760	84,350	74,780	65,880	57,670	50,440	44,030	37,770	27,260
	R*BS012M4A**	4PES-15	148,110	133,150	119,150	107,070	95,730	84,590	74,150	64,500	56,220	48,940	41,610	29,400
	R*BS015M4A**	4NES-20	171,310	154,260	139,170	125,540	112,410	99,490	87,890	76,980	67,530	58,500	50,580	36,640
95°	R*BS003M4A**	2DES-3	42,270	38,020	34,050	30,610	27,460	24,260	21,310	18,600	16,300	14,180	12,130	8,770
	R*BS004M4A**	2CES-4	51,900	46,830	42,100	38,010	34,220	30,380	26,760	23,540	20,710	18,000	15,590	11,500
	R*BS005M4A**	4FES-5	56,300	50,830	45,670	41,310	37,150	32,930	29,060	25,530	22,520	19,670	16,920	12,390
	R*BS006M4A**	4EES-6	75,030	67,400	60,230	53,940	48,280	42,710	37,530	32,800	28,790	24,990	21,340	15,530
	R*BS007M4A**	4DES-7	84,420	75,800	67,950	61,220	54,720	48,480	42,500	37,170	32,590	28,260	24,240	17,650
	R*BS008M4A**	4CES-9	103,400	93,380	83,910	76,010	68,210	60,570	53,530	46,980	41,480	36,290	31,210	22,320
	R*BS010M4A**	4TES-12	122,500	110,440	99,110	89,550	80,130	70,910	62,310	54,560	47,860	40,130	35,530	25,560
	R*BS012M4A**	4PES-15	141,430	127,190	113,500	101,840	91,550	80,130	70,120	60,890	52,890	44,050	38,800	25,640
	R*BS015M4A**	4NES-20	163,500	147,410	131,880	118,990	107,020	94,520	83,240	72,860	63,960	55,710	47,490	33,710
100°	R*BS003M4A**	2DES-3	40,510	36,360	32,520	29,240	26,150	23,060	20,210	17,620	15,370	13,320	11,320	8,140
	R*BS004M4A**	2CES-4	49,740	44,840	40,270	36,290	32,620	28,870	25,450	22,320	19,570	17,110	14,630	10,700
	R*BS005M4A**	4FES-5	53,940	48,580	43,620	39,390	35,360	31,350	27,600	24,180	21,350	18,520	15,850	11,520
	R*BS006M4A**	4EES-6	71,860	64,520	57,600	51,790	46,170	40,660	35,710	31,050	27,050	23,490	20,140	14,530
	R*BS007M4A**	4DES-7	80,890	72,530	64,950	58,340	52,110	46,070	40,310	35,210	30,700	26,610	22,670	16,340
	R*BS008M4A**	4CES-9	99,080	89,130	80,240	72,300	65,010	57,650	50,820	44,530	39,220	34,020	29,360	21,500
	R*BS010M4A**	4TES-12	116,960	105,370	94,630	85,040	76,320	67,330	58,970	51,530	44,730	38,940	33,130	23,720
	R*BS012M4A**	4PES-15	135,220	121,410	108,160	96,800	86,790	75,750	66,300	57,290	49,670	42,850	36,030	25,130
	R*BS015M4A**	4NES-20	156,080	140,090	125,670	113,020	101,690	89,750	78,980	68,750	60,240	52,270	44,490	31,800
110°	R*BS003M4A**	2DES-3	36,980	33,080	29,550	26,440	23,540	20,650	18,040	15,600	13,430	11,700	9,820	6,890
	R*BS004M4A**	2CES-4	45,420	40,810	36,590	32,910	29,490	25,970	22,780	19,860	17,370	15,090	12,820	9,170
	R*BS005M4A**	4FES-5	49,200	44,250	39,570	35,620	31,900	28,120	24,630	21,490	18,020	16,280	13,760	9,840
	R*BS006M4A**	4EES-6	65,650	58,890	52,220	46,780	41,570	36,540	31,890	27,590	23,980	20,670	17,420	12,320
	R*BS007M4A**	4DES-7	73,770	65,960	58,800	52,720	46,980	41,260	36,030	31,160	27,320	23,400	20,160	13,920
	R*BS008M4A**	4CES-9	90,570	81,300	72,890	65,630	58,750	51,880	45,530	39,810	34,740	30,090	25,680	18,380
	R*BS010M4A**	4TES-12	106,310	95,310	84,660	76,510	68,230	60,130	52,400	45,520	39,450	33,820	28,510	19,920
	R*BS012M4A**	4PES-15	122,150	109,410	97,380	86,890	77,410	67,180	58,330	50,160	43,370	36,600	30,690	20,800
	R*BS015M4A**	4NES-20	141,190	126,810	113,300	101,920	91,160	80,000	69,990	60,610	52,730	45,180	38,310	26,850

Additional Compressor Cooling Required†

* Each asterisk represents a variable character based upon model, voltage, and vintage ordered. See page 4 for nomenclature.

† See page 50 for Additional Compressor Cooling Graph.

‡ Multiply capacity by .83 when used with 50 Hz power.

CAPACITY DATA (BTUH)

EXTENDED RANGE MEDIUM TEMPERATURE // R455A BITZER // 60 HZ‡

Ambient Temp. (°F)	Model No.	Comp. Model No.	Suction Temperature (°F)											
			40°	35°	30°	25°	20°	15°	10°	5°	0°	-5°	-10°	-20°
90°	R*BS003M4A**	2DES-3	45,980	41,300	37,050	33,180	29,800	26,300	23,100	20,170	17,650	15,140	13,130	–
	R*BS004M4A**	2CES-4	56,600	51,050	45,870	41,380	37,280	33,080	29,190	25,600	22,500	19,660	16,940	–
	R*BS005M4A**	4FES-5	61,350	55,440	49,810	44,920	40,460	35,900	31,690	27,800	24,510	21,390	18,330	–
	R*BS006M4A**	4EES-6	81,560	73,250	65,540	58,820	52,550	46,300	40,660	35,500	31,050	27,040	23,120	–
	R*BS007M4A**	4DES-7	91,690	82,560	74,030	66,630	59,450	52,510	46,130	40,310	35,310	30,760	26,160	–
	R*BS008M4A**	4CES-9	112,790	101,680	91,490	82,670	74,350	66,060	58,260	51,100	44,930	39,300	33,840	–
	R*BS010M4A**	4TES-12	133,710	120,670	108,350	97,790	87,760	77,510	68,300	59,640	52,120	45,250	38,570	–
	R*BS012M4A**	4PES-15	154,630	138,780	124,160	111,660	99,720	87,590	76,850	66,530	57,750	50,690	42,220	–
	R*BS015M4A**	4NES-20	177,710	60,820	143,270	129,810	115,270	103,480	91,290	79,820	69,660	60,200	51,710	–
95°	R*BS003M4A**	2DES-3	44,120	39,550	35,380	31,790	28,410	25,080	21,960	19,120	16,650	14,440	12,310	–
	R*BS004M4A**	2CES-4	54,350	48,940	43,930	39,620	35,560	31,500	27,770	24,300	21,330	18,600	15,920	–
	R*BS005M4A**	4FES-5	58,880	53,100	47,650	43,040	38,680	34,220	30,120	26,370	23,160	20,170	17,260	–
	R*BS006M4A**	4EES-6	78,300	70,210	62,710	56,080	50,270	44,180	38,650	33,630	29,370	25,470	21,710	–
	R*BS007M4A**	4DES-7	87,950	79,140	70,490	63,540	56,740	50,030	43,840	38,160	33,350	28,820	24,650	–
	R*BS008M4A**	4CES-9	108,430	97,650	87,640	79,070	70,940	62,940	55,470	48,500	42,620	37,160	31,910	–
	R*BS010M4A**	4TES-12	127,930	115,310	103,420	93,100	83,560	73,640	64,810	56,500	49,070	42,200	36,120	–
	R*BS012M4A**	4PES-15	147,970	132,670	118,180	106,110	94,820	82,920	72,390	62,750	54,480	46,440	39,220	–
	R*BS015M4A**	4NES-20	170,410	153,810	138,510	124,730	111,320	98,420	86,510	75,330	65,600	57,000	48,390	–
100°	R*BS003M4A**	2DES-3	42,320	37,910	33,820	30,370	27,050	23,810	20,820	18,050	15,710	13,550	11,530	–
	R*BS004M4A**	2CES-4	52,000	46,850	41,980	37,750	33,900	29,960	26,350	23,000	20,120	17,470	14,960	–
	R*BS005M4A**	4FES-5	56,360	50,790	45,530	41,000	36,810	32,510	28,560	24,940	21,810	18,930	16,190	–
	R*BS006M4A**	4EES-6	74,770	67,290	59,760	53,690	47,670	41,980	36,700	31,790	27,680	23,930	20,430	–
	R*BS007M4A**	4DES-7	84,420	75,640	67,440	60,530	53,980	47,460	41,600	36,140	31,310	27,040	23,040	–
	R*BS008M4A**	4CES-9	103,850	93,640	84,060	75,590	67,710	59,900	52,700	45,980	40,290	34,960	29,870	–
	R*BS010M4A**	4TES-12	122,110	110,180	98,780	88,530	79,210	69,710	61,110	53,180	46,110	39,600	33,720	–
	R*BS012M4A**	4PES-15	141,480	126,120	112,440	100,540	89,590	78,420	68,230	58,760	50,820	43,320	36,470	–
	R*BS015M4A**	4NES-20	162,520	46,690	130,770	118,540	105,770	93,080	81,790	71,050	61,690	53,190	45,340	–
110°	R*BS003M4A**	2DES-3	38,560	34,520	30,640	27,360	24,350	21,340	18,540	16,000	13,850	11,790	9,960	–
	R*BS004M4A**	2CES-4	47,560	42,660	38,120	34,310	30,610	26,970	23,570	20,480	17,690	15,350	13,060	–
	R*BS005M4A**	4FES-5	51,370	46,210	41,300	37,110	33,070	29,160	25,510	22,110	19,280	16,540	14,060	–
	R*BS006M4A**	4EES-6	68,620	61,200	54,260	48,590	42,960	37,670	32,650	28,180	24,370	20,950	17,710	–
	R*BS007M4A**	4DES-7	77,080	68,970	61,500	54,770	48,590	42,600	37,000	31,940	27,580	23,710	19,990	–
	R*BS008M4A**	4CES-9	94,870	85,070	76,070	68,460	61,250	53,870	47,090	40,940	35,710	30,750	26,170	–
	R*BS010M4A**	4TES-12	110,590	99,240	88,570	79,540	70,670	61,820	53,890	46,540	40,110	34,020	28,690	–
	R*BS012M4A**	4PES-15	127,780	113,950	100,650	89,630	79,480	69,110	59,760	51,310	43,530	36,570	30,550	–
	R*BS015M4A**	4NES-20	147,760	32,490	117,800	105,840	94,210	82,420	72,080	62,170	53,710	46,130	38,580	–

20°F Superheat Maximum Additional Compressor Cooling Required†

* Each asterisk represents a variable character based upon model, voltage, and vintage ordered. See page 4 for nomenclature.

† See page 50 for Additional Compressor Cooling Graph.

‡ Multiply capacity by .83 when used with 50 Hz power.

CAPACITY DATA (BTUH)

EXTENDED RANGE MEDIUM TEMPERATURE // R404A BITZER // 60 HZ‡

Ambient Temp. (°F)	Model No.	Comp. Model No.	Suction Temperature (°F)											
			40°	35°	30°	25°	20°	15°	10°	5°	0°	-5°	-10°	-20°
90°	R*BS003M4A**	2DES-3	52,900	48,340	43,780	39,610	35,700	32,420	29,140	25,860	22,580	19,890	17,420	13,060
	R*BS004M4A**	2CES-4	62,790	57,570	52,340	47,520	42,990	39,140	35,290	31,440	27,590	24,410	21,470	16,260
	R*BS005M4A**	4FES-5	67,580	61,910	56,240	51,010	46,080	41,900	37,730	33,560	29,390	25,970	22,830	17,330
	R*BS006M4A**	4EES-6	89,670	81,730	73,790	66,570	59,830	54,240	48,660	43,080	37,500	33,000	28,890	21,740
	R*BS007M4A**	4DES-7	104,950	95,860	86,760	78,470	70,700	64,240	57,760	51,280	44,800	39,540	34,740	26,350
	R*BS008M4A**	4CES-9	123,380	112,810	102,230	92,560	83,480	75,870	68,260	60,650	53,040	46,840	41,160	31,220
	R*BS010M4A**	4TES-12	150,290	137,640	124,990	113,310	102,270	92,920	83,580	74,240	64,900	57,210	50,150	37,770
	R*BS012M4A**	4PES-15	179,260	163,530	147,790	133,340	119,770	108,400	97,040	85,680	74,320	65,110	56,700	42,070
	R*BS015M4A**	4NES-20	204,870	187,630	170,390	154,430	139,350	126,570	113,800	101,030	88,260	77,790	68,190	51,410
95°	R*BS003M4A**	2DES-3	50,370	46,000	41,620	37,630	33,870	30,730	27,590	24,450	21,310	18,740	16,380	12,220
	R*BS004M4A**	2CES-4	59,810	54,800	49,780	45,170	40,820	37,150	33,460	29,770	26,080	23,030	20,220	15,260
	R*BS005M4A**	4FES-5	64,240	58,830	53,410	48,410	43,710	39,740	35,760	31,780	27,800	24,540	21,550	16,320
	R*BS006M4A**	4EES-6	85,400	77,790	70,180	63,270	56,810	51,480	46,140	40,800	35,460	31,160	27,230	20,420
	R*BS007M4A**	4DES-7	100,120	91,390	82,660	74,690	67,240	61,030	54,820	48,610	42,400	37,370	32,780	24,770
	R*BS008M4A**	4CES-9	117,830	107,660	97,480	88,160	79,430	72,130	64,810	57,490	50,170	44,220	38,770	29,280
	R*BS010M4A**	4TES-12	143,140	131,000	118,860	107,640	97,050	88,100	79,130	70,160	61,190	53,830	47,080	35,280
	R*BS012M4A**	4PES-15	170,760	155,630	140,490	126,590	113,540	102,630	91,720	80,810	69,900	61,080	53,040	39,100
	R*BS015M4A**	4NES-20	195,440	178,820	162,190	146,840	132,340	120,070	107,810	95,550	83,290	73,250	64,070	48,060
100°	R*BS003M4A**	2DES-3	–	–	39,450	35,630	32,040	29,040	26,040	23,040	20,040	17,580	15,330	11,380
	R*BS004M4A**	2CES-4	–	–	47,200	42,790	38,630	35,110	31,590	28,070	24,550	21,650	18,970	14,250
	R*BS005M4A**	4FES-5	–	–	50,560	45,800	41,320	37,530	33,750	29,970	26,190	23,090	20,250	15,300
	R*BS006M4A**	4EES-6	–	–	66,550	59,940	53,780	48,700	43,600	38,500	33,400	29,300	25,570	19,100
	R*BS007M4A**	4DES-7	–	–	78,530	70,900	63,770	57,830	51,890	45,950	40,010	35,200	30,820	23,200
	R*BS008M4A**	4CES-9	–	–	92,710	83,760	75,370	68,370	61,350	54,330	47,310	41,610	36,400	27,350
	R*BS010M4A**	4TES-12	–	–	112,740	101,990	91,840	83,260	74,680	66,100	57,520	50,490	44,050	32,820
	R*BS012M4A**	4PES-15	–	–	133,210	119,860	107,340	96,880	86,430	75,980	65,530	57,110	49,450	36,190
	R*BS015M4A**	4NES-20	–	–	154,060	139,270	125,370	113,610	101,860	90,110	78,360	68,770	59,990	44,760
110°	R*BS003M4A**	2DES-3	–	–	35,070	31,580	28,330	25,620	22,900	20,180	17,460	15,250	13,230	9,690
	R*BS004M4A**	2CES-4	–	–	42,010	38,000	34,240	31,050	27,860	24,670	21,480	18,860	16,450	12,220
	R*BS005M4A**	4FES-5	–	–	44,830	40,550	36,520	33,140	29,740	26,340	22,940	20,170	17,640	13,220
	R*BS006M4A**	4EES-6	–	–	59,230	53,250	47,660	43,070	38,470	33,870	29,270	25,580	22,230	16,440
	R*BS007M4A**	4DES-7	–	–	70,220	63,280	56,770	51,370	45,980	40,590	35,200	30,860	26,910	20,060
	R*BS008M4A**	4CES-9	–	–	83,100	74,930	67,260	60,860	54,450	48,040	41,630	36,450	31,730	23,560
	R*BS010M4A**	4TES-12	–	–	100,420	90,670	81,450	73,670	65,870	58,070	50,270	43,920	38,120	28,040
	R*BS012M4A**	4PES-15	–	–	118,650	106,450	95,020	85,500	75,980	66,460	56,940	49,330	42,410	30,540
	R*BS015M4A**	4NES-20	–	–	137,540	124,120	111,440	100,730	90,030	79,330	68,630	59,930	52,000	38,320

* Each asterisk represents a variable character based upon model, voltage, and vintage ordered. See page 4 for nomenclature.

† See page 50 for Additional Compressor Cooling Graph.

‡ Multiply capacity by .83 when used with 50 Hz power.

CAPACITY DATA (BTUH)

EXTENDED RANGE MEDIUM TEMPERATURE // R407A BITZER // 60 HZ‡

Ambient Temp. (°F)	Model No.	Comp. Model No.	Suction Temperature (°F)											
			40°	35°	30°	25°	20°	15°	10°	5°	0°	-5°	-10°	-20°
90°	R*BS003M4A**	2DES-3	49,970	45,080	40,190	35,830	31,810	28,560	25,310	22,060	18,810	16,260	13,960	10,030
	R*BS004M4A**	2CES-4	60,040	54,320	48,590	43,450	38,700	34,840	30,970	27,100	23,230	20,180	17,420	12,670
	R*BS005M4A**	4FES-5	65,300	59,100	52,900	47,310	42,130	37,920	33,700	29,480	25,260	21,920	18,900	13,710
	R*BS006M4A**	4EES-6	84,840	76,580	68,320	60,950	54,140	48,650	43,150	37,650	32,150	27,840	23,940	17,330
	R*BS007M4A**	4DES-7	98,200	88,720	79,240	70,760	62,910	56,540	50,180	43,820	37,460	32,420	27,880	20,110
	R*BS008M4A**	4CES-9	117,460	106,450	95,430	85,500	76,280	68,750	61,220	53,690	46,160	40,140	34,700	25,360
	R*BS010M4A**	4TES-12	143,940	130,700	117,450	105,410	94,160	84,860	75,570	66,280	56,990	49,500	42,670	30,860
	R*BS012M4A**	4PES-15	169,640	153,460	137,270	122,680	109,130	98,010	86,890	75,770	64,650	55,810	47,760	33,880
	R*BS015M4A**	4NES-20	194,560	176,560	158,550	142,110	126,820	114,200	101,580	88,960	76,340	66,230	56,990	41,040
95°	R*BS003M4A**	2DES-3	48,040	43,300	38,550	34,320	30,410	27,280	24,130	20,980	17,830	15,380	13,160	9,380
	R*BS004M4A**	2CES-4	57,860	52,260	46,650	41,660	37,050	33,300	29,560	25,820	22,080	19,140	16,470	11,910
	R*BS005M4A**	4FES-5	62,900	56,820	50,740	45,330	40,300	36,210	32,130	28,050	23,970	20,760	17,840	12,860
	R*BS006M4A**	4EES-6	81,560	73,550	65,530	58,380	51,770	46,470	41,150	35,830	30,510	26,350	22,600	16,210
	R*BS007M4A**	4DES-7	94,510	85,250	75,980	67,750	60,140	53,990	47,830	41,670	35,510	30,660	26,300	18,830
	R*BS008M4A**	4CES-9	113,190	102,400	91,610	81,960	73,030	65,750	58,450	51,150	43,850	38,070	32,840	23,850
	R*BS010M4A**	4TES-12	138,450	125,480	112,500	100,850	89,970	80,990	72,010	63,030	54,050	46,820	40,240	28,880
	R*BS012M4A**	4PES-15	163,020	147,190	131,350	117,210	104,080	93,330	82,590	71,850	61,110	52,570	44,830	31,520
	R*BS015M4A**	4NES-20	187,110	169,500	151,890	135,960	121,130	108,920	96,710	84,500	72,290	62,550	53,690	38,380
100°	R*BS003M4A**	2DES-3	–	–	36,910	32,810	29,020	25,990	22,950	19,910	16,870	14,500	12,370	8,740
	R*BS004M4A**	2CES-4	–	–	44,710	39,880	35,410	31,800	28,180	24,560	20,940	18,090	15,530	11,160
	R*BS005M4A**	4FES-5	–	–	48,600	43,340	38,480	34,540	30,590	26,640	22,690	19,600	16,790	12,020
	R*BS006M4A**	4EES-6	–	–	62,740	55,810	49,410	44,290	39,150	34,010	28,870	24,870	21,260	15,140
	R*BS007M4A**	4DES-7	–	–	72,730	64,750	57,380	51,430	45,480	39,530	33,580	28,920	24,720	17,570
	R*BS008M4A**	4CES-9	–	–	87,790	78,440	69,780	62,740	55,680	48,620	41,560	36,010	30,970	22,360
	R*BS010M4A**	4TES-12	–	–	107,550	96,280	85,750	77,080	68,420	59,760	51,100	44,150	37,830	26,970
	R*BS012M4A**	4PES-15	–	–	125,430	111,740	99,050	88,690	78,310	67,930	57,550	49,370	41,930	29,190
	R*BS015M4A**	4NES-20	–	–	145,220	129,810	115,450	103,660	91,870	80,080	68,290	58,920	50,400	35,740
110°	R*BS003M4A**	2DES-3	–	–	33,630	29,790	26,240	23,420	20,590	17,760	14,930	12,740	10,770	–
	R*BS004M4A**	2CES-4	–	–	40,830	36,320	32,150	28,770	25,400	22,030	18,660	16,040	13,680	–
	R*BS005M4A**	4FES-5	–	–	44,330	39,410	34,860	31,180	27,510	23,840	20,170	17,310	14,740	–
	R*BS006M4A**	4EES-6	–	–	57,230	50,730	44,750	39,970	35,200	30,430	25,660	21,950	18,630	–
	R*BS007M4A**	4DES-7	–	–	66,250	58,800	51,910	46,380	40,840	35,300	29,760	25,470	21,620	–
	R*BS008M4A**	4CES-9	–	–	80,190	71,440	63,340	56,790	50,220	43,650	37,080	31,930	27,320	–
	R*BS010M4A**	4TES-12	–	–	97,620	87,120	77,350	69,340	61,310	53,280	45,250	38,850	33,060	–
	R*BS012M4A**	4PES-15	–	–	113,680	100,870	89,010	79,400	69,790	60,180	50,570	43,010	36,250	–
	R*BS015M4A**	4NES-20	–	–	131,840	117,510	104,120	93,200	82,260	71,320	60,380	51,740	43,950	–

20°F Superheat Maximum

* Each asterisk represents a variable character based upon model, voltage, and vintage ordered. See page 4 for nomenclature.

† See page 50 for Additional Compressor Cooling Graph.

‡ Multiply capacity by .83 when used with 50 Hz power.

CAPACITY DATA (BTUH)

EXTENDED RANGE MEDIUM TEMPERATURE // R407C BITZER // 60 HZ‡

Ambient Temp. (°F)	Model No.	Comp. Model No.	Suction Temperature (°F)											
			40°	35°	30°	25°	20°	15°	10°	5°	0°	-5°	-10°	-20°
90°	R*BS003M4A**	2DES-3	48,600	43,820	39,040	34,810	30,930	27,790	24,650	21,510	18,370	15,880	13,610	–
	R*BS004M4A**	2CES-4	58,120	52,530	46,940	41,960	37,370	33,640	29,910	26,180	22,450	19,480	16,760	–
	R*BS005M4A**	4FES-5	61,670	55,630	49,590	44,180	39,200	35,170	31,120	27,070	23,020	19,790	16,840	–
	R*BS006M4A**	4EES-6	80,320	72,290	64,250	57,130	50,580	45,310	40,040	34,770	29,500	25,330	21,520	–
	R*BS007M4A**	4DES-7	94,000	84,780	75,550	67,360	59,800	53,700	47,580	41,460	35,340	30,440	25,980	–
	R*BS008M4A**	4CES-9	112,420	101,710	90,990	81,390	72,520	65,280	58,040	50,800	43,560	37,720	32,370	–
	R*BS010M4A**	4TES-12	137,300	124,610	111,910	100,400	89,650	80,730	71,810	62,890	53,970	46,670	39,930	–
	R*BS012M4A**	4PES-15	161,800	146,310	130,820	116,880	103,950	93,290	82,610	71,930	61,250	52,620	44,660	–
	R*BS015M4A**	4NES-20	185,530	168,300	151,060	135,360	120,770	108,650	96,540	84,430	72,320	62,450	53,320	–
95°	R*BS003M4A**	2DES-3	46,730	42,130	37,520	33,440	29,680	26,650	23,610	20,570	17,530	15,120	12,910	–
	R*BS004M4A**	2CES-4	56,010	50,580	45,140	40,330	35,900	32,290	28,680	25,070	21,460	18,570	15,910	–
	R*BS005M4A**	4FES-5	59,280	53,400	47,510	42,320	37,500	33,580	29,670	25,760	21,850	18,730	15,850	–
	R*BS006M4A**	4EES-6	77,060	69,320	61,580	54,710	48,390	43,290	38,200	33,110	28,020	23,970	20,270	–
	R*BS007M4A**	4DES-7	90,380	81,430	72,480	64,570	57,280	51,370	45,450	39,530	33,610	28,870	24,540	–
	R*BS008M4A**	4CES-9	108,240	97,820	87,390	78,120	69,570	62,550	55,540	48,530	41,520	35,870	30,670	–
	R*BS010M4A**	4TES-12	132,190	119,760	107,330	96,200	85,800	77,170	68,540	59,910	51,280	44,210	37,690	–
	R*BS012M4A**	4PES-15	155,640	140,500	125,350	111,850	99,310	88,990	78,660	68,330	58,000	49,630	41,940	–
	R*BS015M4A**	4NES-20	178,600	161,760	144,920	129,710	115,560	103,840	92,100	80,360	68,620	59,070	50,270	–
100°	R*BS003M4A**	2DES-3	–	–	36,000	32,070	28,440	25,520	22,580	19,640	16,700	14,350	12,200	–
	R*BS004M4A**	2CES-4	–	–	43,340	38,710	34,430	30,940	27,450	23,960	20,470	17,640	15,060	–
	R*BS005M4A**	4FES-5	–	–	45,460	40,430	35,800	32,020	28,240	24,460	20,680	17,660	15,660	–
	R*BS006M4A**	4EES-6	–	–	58,900	52,290	46,200	41,290	36,370	31,450	26,530	22,610	19,000	–
	R*BS007M4A**	4DES-7	–	–	69,400	61,780	54,750	49,050	43,330	37,610	31,890	27,300	23,070	–
	R*BS008M4A**	4CES-9	–	–	83,790	74,860	66,600	59,820	53,040	46,260	39,480	34,000	28,940	–
	R*BS010M4A**	4TES-12	–	–	102,720	91,960	81,900	73,580	65,240	56,900	48,560	41,740	35,450	–
	R*BS012M4A**	4PES-15	–	–	119,830	106,770	94,650	84,680	74,690	64,700	54,710	46,670	39,230	–
	R*BS015M4A**	4NES-20	–	–	138,710	124,010	110,310	98,980	87,630	76,280	64,930	55,720	47,210	–
110°	R*BS003M4A**	2DES-3	–	–	32,940	29,300	25,930	23,210	20,470	17,730	14,990	12,780	10,730	–
	R*BS004M4A**	2CES-4	–	–	39,710	35,440	31,480	28,220	24,960	21,700	18,440	15,790	13,340	–
	R*BS005M4A**	4FES-5	–	–	41,330	36,690	32,400	28,880	25,370	21,860	18,350	15,500	12,870	–
	R*BS006M4A**	4EES-6	–	–	53,590	47,470	41,830	37,270	32,700	28,130	23,560	19,870	16,470	–
	R*BS007M4A**	4DES-7	–	–	63,240	56,210	49,710	44,380	39,060	33,740	28,420	24,110	20,130	–
	R*BS008M4A**	4CES-9	–	–	76,570	68,320	60,670	54,370	48,050	41,730	35,410	30,230	25,470	–
	R*BS010M4A**	4TES-12	–	–	93,370	83,370	74,050	66,320	58,590	50,860	43,130	36,810	30,990	–
	R*BS012M4A**	4PES-15	–	–	108,740	96,550	85,250	75,980	66,720	57,460	48,200	40,710	33,890	–
	R*BS015M4A**	4NES-20	–	–	126,110	112,480	99,730	89,200	78,660	68,120	57,580	49,020	41,160	–

20°F Superheat Maximum

* Each asterisk represents a variable character based upon model, voltage, and vintage ordered. See page 4 for nomenclature.

† See page 50 for Additional Compressor Cooling Graph.

‡ Multiply capacity by .83 when used with 50 Hz power.

CAPACITY DATA (BTUH)

EXTENDED RANGE MEDIUM TEMPERATURE // R407F BITZER // 60 HZ‡

Ambient Temp. (°F)	Model No.	Comp. Model No.	Suction Temperature (°F)											
			40°	35°	30°	25°	20°	15°	10°	5°	0°	-5°	-10°	-20°
90°	R*BS003M4A**	2DES-3	53,020	47,880	42,730	38,140	33,890	30,450	27,010	23,570	20,130	17,430	14,980	10,800
	R*BS004M4A**	2CES-4	63,730	57,700	51,660	46,240	41,220	37,120	33,020	28,920	24,820	21,580	18,650	13,590
	R*BS005M4A**	4FES-5	69,410	62,850	56,290	50,370	44,880	40,420	35,940	31,460	26,980	23,430	20,220	14,700
	R*BS006M4A**	4EES-6	90,190	81,450	72,710	64,900	57,690	51,870	46,030	40,190	34,350	29,760	25,620	18,590
	R*BS007M4A**	4DES-7	104,400	94,370	84,340	75,360	67,040	60,280	53,530	46,780	40,030	34,670	29,840	21,580
	R*BS008M4A**	4CES-9	124,830	113,180	101,530	91,010	81,240	73,250	65,260	57,270	49,280	42,880	37,090	27,160
	R*BS010M4A**	4TES-12	150,310	136,640	122,960	110,490	98,810	89,110	79,400	69,690	59,980	52,090	44,860	32,260
	R*BS012M4A**	4PES-15	177,900	161,130	144,360	129,190	115,080	103,420	91,760	80,100	68,440	59,090	50,540	35,680
	R*BS015M4A**	4NES-20	204,830	186,120	167,400	150,270	134,290	121,020	107,740	94,460	81,180	70,450	60,590	43,450
95°	R*BS003M4A**	2DES-3	51,110	46,110	41,100	36,640	32,500	29,170	25,830	22,490	19,150	16,530	14,170	10,130
	R*BS004M4A**	2CES-4	61,590	55,670	49,740	44,460	39,570	35,600	31,620	27,640	23,660	20,530	17,680	12,810
	R*BS005M4A**	4FES-5	67,040	60,590	54,140	48,390	43,050	38,710	34,360	30,010	25,660	22,240	19,130	13,820
	R*BS006M4A**	4EES-6	86,930	78,430	69,930	62,330	55,310	49,660	44,000	38,340	32,680	28,240	24,240	17,430
	R*BS007M4A**	4DES-7	100,740	90,920	81,090	72,350	64,260	57,700	51,150	44,600	38,050	32,870	28,220	20,260
	R*BS008M4A**	4CES-9	120,600	109,160	97,720	87,470	77,990	70,240	62,470	54,700	46,930	40,770	35,190	25,600
	R*BS010M4A**	4TES-12	144,420	131,080	117,730	105,710	94,450	85,070	75,700	66,330	56,960	49,310	42,320	30,110
	R*BS012M4A**	4PES-15	170,800	154,450	138,100	123,450	109,810	98,560	87,300	76,040	64,780	55,730	47,470	33,110
	R*BS015M4A**	4NES-20	196,810	178,590	160,360	143,800	128,350	115,520	102,680	89,840	77,000	66,630	57,140	40,560
100°	R*BS003M4A**	2DES-3	–	–	39,480	35,130	31,110	27,890	24,650	21,410	18,170	15,640	13,360	9,460
	R*BS004M4A**	2CES-4	–	–	47,810	42,690	37,940	34,080	30,220	26,360	22,500	19,450	16,710	12,030
	R*BS005M4A**	4FES-5	–	–	52,000	46,400	41,220	37,020	32,800	28,580	24,360	21,060	18,050	12,950
	R*BS006M4A**	4EES-6	–	–	67,140	59,760	52,940	47,470	41,980	36,490	31,000	26,730	22,860	16,320
	R*BS007M4A**	4DES-7	–	–	77,840	69,340	61,490	55,130	48,780	42,430	36,080	31,090	26,600	18,950
	R*BS008M4A**	4CES-9	–	–	93,900	83,950	74,720	67,180	59,650	52,120	44,590	38,660	33,270	24,060
	R*BS010M4A**	4TES-12	–	–	112,530	100,940	90,070	81,030	71,990	62,950	53,910	46,550	39,790	28,020
	R*BS012M4A**	4PES-15	–	–	131,860	117,730	104,580	93,710	82,840	71,970	61,100	52,390	44,410	30,560
	R*BS015M4A**	4NES-20	–	–	153,320	137,360	122,440	110,060	97,660	85,260	72,860	62,850	53,670	37,660
110°	R*BS003M4A**	2DES-3	–	–	36,210	32,120	28,330	25,310	22,270	19,230	16,190	13,820	11,690	–
	R*BS004M4A**	2CES-4	–	–	43,950	39,130	34,670	31,060	27,430	23,800	20,170	17,340	14,790	–
	R*BS005M4A**	4FES-5	–	–	47,720	42,450	37,570	33,630	29,680	25,730	21,780	18,700	15,930	–
	R*BS006M4A**	4EES-6	–	–	61,620	54,660	48,240	43,110	37,980	32,850	27,720	23,720	20,150	–
	R*BS007M4A**	4DES-7	–	–	71,350	63,370	55,980	50,040	44,080	38,120	32,160	27,540	23,390	–
	R*BS008M4A**	4CES-9	–	–	86,300	76,930	68,240	61,190	54,130	47,070	40,010	34,460	29,500	–
	R*BS010M4A**	4TES-12	–	–	102,140	91,420	81,390	73,000	64,620	56,240	47,860	41,020	34,750	–
	R*BS012M4A**	4PES-15	–	–	119,530	106,390	94,150	84,090	74,010	63,930	53,850	45,730	38,390	–
	R*BS015M4A**	4NES-20	–	–	139,270	124,520	110,660	99,170	87,660	76,150	64,640	55,320	46,820	–

20°F Superheat Maximum

* Each asterisk represents a variable character based upon model, voltage, and vintage ordered. See page 4 for nomenclature.

† See page 50 for Additional Compressor Cooling Graph.

‡ Multiply capacity by .83 when used with 50 Hz power.

CAPACITY DATA (BTUH)

EXTENDED RANGE MEDIUM TEMPERATURE // R448A, R449A BITZER // 60 HZ‡

Ambient Temp. (°F)	Model No.	Comp. Model No.	Suction Temperature (°F)											
			40°	35°	30°	25°	20°	15°	10°	5°	0°	-5°	-10°	-20°
90°	R*BS003M4A**	2DES-3	50,900	46,020	41,140	36,780	32,750	29,480	26,210	22,940	19,670	17,090	14,750	10,030
	R*BS004M4A**	2CES-4	61,160	55,440	49,710	44,570	39,800	35,910	32,010	28,110	24,210	21,130	18,320	12,670
	R*BS005M4A**	4FES-5	66,620	60,400	54,180	48,570	43,360	39,110	34,850	30,590	26,330	22,950	19,880	13,710
	R*BS006M4A**	4EES-6	86,570	78,290	70,000	62,590	55,740	50,190	44,640	39,090	33,540	29,170	25,200	17,330
	R*BS007M4A**	4DES-7	100,220	90,710	81,200	72,690	64,790	58,360	51,940	45,520	39,100	33,990	29,380	20,110
	R*BS008M4A**	4CES-9	119,800	108,760	97,710	87,730	78,460	70,870	63,270	55,670	48,070	41,970	36,440	25,360
	R*BS010M4A**	4TES-12	147,680	134,030	120,370	107,990	96,450	86,960	77,480	68,000	58,520	50,940	44,050	30,860
	R*BS012M4A**	4PES-15	174,050	157,330	140,600	125,560	111,630	100,270	88,920	77,570	66,220	57,290	49,180	33,880
	R*BS015M4A**	4NES-20	201,180	182,600	164,020	147,100	131,390	118,490	105,600	92,710	79,820	69,570	60,240	41,040
95°	R*BS003M4A**	2DES-3	48,960	44,230	39,490	35,260	31,340	28,190	25,020	21,850	18,680	16,190	13,940	10,070
	R*BS004M4A**	2CES-4	58,970	53,370	47,760	42,760	38,130	34,350	30,580	26,810	23,040	20,060	17,350	12,690
	R*BS005M4A**	4FES-5	64,200	58,100	52,000	46,560	41,500	37,370	33,250	29,130	25,010	21,760	18,790	13,710
	R*BS006M4A**	4EES-6	83,260	75,220	67,170	59,990	53,330	47,970	42,600	37,230	31,860	27,640	23,820	17,300
	R*BS007M4A**	4DES-7	96,500	87,210	77,910	69,640	61,980	55,770	49,550	43,330	37,110	32,190	27,750	20,130
	R*BS008M4A**	4CES-9	115,490	104,670	93,840	84,140	75,160	67,810	60,440	53,070	45,700	39,840	34,520	25,350
	R*BS010M4A**	4TES-12	141,880	128,530	115,180	103,220	92,080	82,940	73,790	64,640	55,490	48,180	41,560	30,200
	R*BS012M4A**	4PES-15	167,040	150,700	134,360	119,820	106,350	95,410	84,460	73,510	62,560	53,950	46,180	32,920
	R*BS015M4A**	4NES-20	193,380	175,240	157,100	140,730	125,520	113,060	100,610	88,160	75,710	65,850	56,920	41,590
100°	R*BS003M4A**	2DES-3	–	–	37,840	33,740	29,940	26,880	23,820	20,760	17,700	15,300	13,130	9,410
	R*BS004M4A**	2CES-4	–	–	45,800	40,960	36,470	32,830	29,180	25,530	21,880	18,990	16,380	11,910
	R*BS005M4A**	4FES-5	–	–	49,830	44,540	39,650	35,670	31,680	27,690	23,700	20,570	17,710	12,840
	R*BS006M4A**	4EES-6	–	–	64,350	57,380	50,940	45,750	40,560	35,370	30,180	26,120	22,440	16,200
	R*BS007M4A**	4DES-7	–	–	74,620	66,600	59,180	53,160	47,150	41,140	35,130	30,400	26,130	18,820
	R*BS008M4A**	4CES-9	–	–	89,960	80,570	71,850	64,740	57,610	50,480	43,350	37,720	32,590	23,800
	R*BS010M4A**	4TES-12	–	–	110,010	98,470	87,700	78,890	70,080	61,270	52,460	45,450	39,090	28,250
	R*BS012M4A**	4PES-15	–	–	128,160	114,100	101,100	90,550	80,000	69,450	58,900	50,670	43,210	30,560
	R*BS015M4A**	4NES-20	–	–	150,190	134,390	119,680	107,690	95,680	83,670	71,660	62,190	53,610	38,950
110°	R*BS003M4A**	2DES-3	–	–	34,530	30,690	27,130	24,270	21,420	18,570	15,720	13,490	11,470	8,060
	R*BS004M4A**	2CES-4	–	–	41,880	37,360	33,170	29,760	26,350	22,940	19,530	16,870	14,460	10,350
	R*BS005M4A**	4FES-5	–	–	45,490	40,550	35,960	32,240	28,530	24,820	21,110	18,210	15,590	11,120
	R*BS006M4A**	4EES-6	–	–	58,750	52,210	46,190	41,370	36,540	31,710	26,880	23,110	19,730	14,020
	R*BS007M4A**	4DES-7	–	–	68,040	60,550	53,610	48,010	42,410	36,810	31,210	26,850	22,920	16,240
	R*BS008M4A**	4CES-9	–	–	82,230	73,440	65,280	58,660	52,020	45,380	38,740	33,510	28,810	20,860
	R*BS010M4A**	4TES-12	–	–	99,710	88,980	79,020	70,900	62,760	54,620	46,480	40,040	34,240	24,340
	R*BS012M4A**	4PES-15	–	–	115,910	102,800	90,700	80,960	71,230	61,500	51,770	44,190	37,450	25,950
	R*BS015M4A**	4NES-20	–	–	136,420	121,770	108,100	96,990	85,890	74,790	63,690	54,980	47,150	33,770

20°F Superheat Maximum

* Each asterisk represents a variable character based upon model, voltage, and vintage ordered. See page 4 for nomenclature.

† See page 50 for Additional Compressor Cooling Graph.

‡ Multiply capacity by .83 when used with 50 Hz power.

CAPACITY DATA (BTUH)

LOW TEMPERATURE // R454A DISCUS // 60 HZ‡

Ambient Temp. (°F)	Model No.	Comp. Model No.	Suction Temperature (°F)								
			0°	-5°	-10°	-15°	-20°	-25°	-30°	-35°	-40°
90°	R*DS003L4A**	2YF3F13KE	33,770	30,540	26,400	22,660	19,660	16,770	14,260	12,040	10,210
	R*DS004L4A**	2YL3F15KE	37,370	33,900	29,310	25,160	21,880	18,670	15,860	13,390	11,380
	R*DS005L4A**	2YA3F17KE	41,660	37,880	32,840	28,300	24,570	20,990	17,830	15,000	12,670
	R*DS006L4A**	3YA3F21KE	53,230	48,150	41,490	35,470	30,630	26,010	21,930	18,350	15,420
	R*DS008L4A**	3YB3F24KE	62,070	56,240	48,540	41,680	36,040	30,700	25,970	21,780	18,360
	R*DS009L4A**	3YF3F29K0	72,920	66,050	57,100	49,230	42,720	36,460	30,920	25,950	21,790
	R*DS010L4A**	3YS3F33KE	80,290	72,920	63,330	54,790	47,420	40,470	34,360	28,860	24,210
	R*DS012L4A**	4YBNF40KE	95,910	87,430	76,080	65,810	57,320	49,010	41,660	35,110	29,560
	R*DS015L4A**	4YHNF46KE	107,830	99,060	86,130	74,870	65,450	56,240	47,820	40,420	34,020
	R*DS022L4A**	4YJDF59KE	132,220	121,090	105,940	91,550	80,120	69,050	58,710	49,560	42,110
95°	R*DS003L4A**	2YF3F13KE	32,420	29,260	25,230	21,630	18,730	15,950	13,520	11,380	9,620
	R*DS004L4A**	2YL3F15KE	35,850	32,420	28,010	24,030	20,830	17,710	15,050	12,670	10,740
	R*DS005L4A**	2YA3F17KE	39,840	36,150	31,360	26,940	23,410	20,000	16,910	14,210	11,950
	R*DS006L4A**	3YA3F21KE	51,030	46,040	39,550	33,830	29,160	24,670	20,740	17,310	14,560
	R*DS008L4A**	3YB3F24KE	58,840	53,780	46,400	39,740	34,290	29,190	24,560	20,540	17,310
	R*DS009L4A**	3YF3F29K0	69,840	63,270	54,770	46,850	40,730	34,630	29,270	24,470	20,560
	R*DS010L4A**	3YS3F33KE	76,960	69,760	60,350	51,880	45,020	38,420	32,500	27,250	22,830
	R*DS012L4A**	4YBNF40KE	91,860	83,570	72,710	62,630	54,560	46,590	39,500	33,100	27,880
	R*DS015L4A**	4YHNF46KE	103,130	94,190	82,250	71,170	62,200	53,440	45,320	38,390	32,060
	R*DS022L4A**	4YJDF59KE	126,470	115,400	100,660	87,180	76,160	65,420	55,880	47,090	39,880
100°	R*DS003L4A**	2YF3F13KE	31,330	28,000	24,140	20,640	17,980	15,270	12,910	10,840	9,170
	R*DS004L4A**	2YL3F15KE	34,660	30,970	26,740	22,860	19,950	16,950	14,350	12,070	10,210
	R*DS005L4A**	2YA3F17KE	38,400	34,540	29,860	25,640	22,440	19,090	16,140	13,540	11,380
	R*DS006L4A**	3YA3F21KE	49,230	43,870	37,700	32,130	27,920	23,580	19,810	16,650	13,860
	R*DS008L4A**	3YB3F24KE	57,380	51,290	44,140	37,720	32,870	27,820	23,420	19,580	16,460
	R*DS009L4A**	3YF3F29K0	67,450	60,470	52,110	44,490	38,930	33,090	27,960	23,330	19,530
	R*DS010L4A**	3YS3F33KE	74,230	66,470	57,490	49,300	43,060	36,630	31,010	25,880	21,670
	R*DS012L4A**	4YBNF40KE	88,430	79,610	69,020	59,440	52,110	44,360	37,590	31,480	26,410
	R*DS015L4A**	4YHNF46KE	99,390	89,810	78,220	67,600	59,310	50,730	43,210	36,240	30,460
	R*DS022L4A**	4YJDF59KE	121,810	110,020	95,720	82,730	72,930	62,420	53,270	44,740	37,820
110°	R*DS003L4A**	2YF3F13KE	28,890	25,930	22,280	18,930	16,270	13,880	11,540	9,720	8,150
	R*DS004L4A**	2YL3F15KE	31,840	28,650	24,610	20,970	18,040	15,380	12,830	10,820	9,120
	R*DS005L4A**	2YA3F17KE	35,020	31,740	27,390	23,460	20,270	17,330	14,470	12,190	10,190
	R*DS006L4A**	3YA3F21KE	44,880	40,310	34,580	29,320	25,120	21,330	17,710	14,900	12,520
	R*DS008L4A**	3YB3F24KE	52,460	47,300	40,470	34,470	29,580	25,190	20,880	17,520	14,630
	R*DS009L4A**	3YF3F29K0	61,740	55,590	47,790	40,730	35,040	29,910	24,830	20,850	17,390
	R*DS010L4A**	3YS3F33KE	67,760	61,210	52,700	45,010	38,760	33,130	27,560	23,140	19,270
	R*DS012L4A**	4YBNF40KE	80,620	73,200	63,200	54,160	46,850	40,010	33,400	28,020	23,440
	R*DS015L4A**	4YHNF46KE	90,300	82,550	71,640	61,450	53,560	45,710	38,330	32,270	27,040
	R*DS022L4A**	4YJDF59KE	112,080	101,720	86,930	75,820	65,710	56,690	47,320	39,980	32,340

Additional Compressor Cooling Required†

* Each asterisk represents a variable character based upon model, voltage, and vintage ordered. See page 4 for nomenclature.

‡ Multiply capacity by .83 when used with 50 Hz power.

Liquid injection standard.

CAPACITY DATA (BTUH)

LOW TEMPERATURE // R454C DISCUS // 60 HZ‡

Ambient Temp. (°F)	Model No.	Comp. Model No.	Suction Temperature (°F)								
			0°	-5°	-10°	-15°	-20°	-25°	-30°	-35°	-40°
90°	R*DS003L4A**	2YF3F13KE	26,120	23,030	19,780	16,900	14,460	12,180	10,260	8,540	7,110
	R*DS004L4A**	2YL3F15KE	28,980	25,590	22,000	18,760	16,050	13,520	11,440	9,510	7,940
	R*DS005L4A**	2YA3F17KE	32,530	28,700	24,720	21,090	18,050	15,230	12,910	10,690	8,870
	R*DS006L4A**	3YA3F21KE	40,970	36,060	30,720	26,120	22,200	18,620	15,650	12,930	10,700
	R*DS008L4A**	3YB3F24KE	47,960	42,140	36,080	30,660	26,070	21,880	18,440	15,280	12,720
	R*DS009L4A**	3YF3F29K0	56,650	50,030	42,870	36,490	31,020	26,160	22,060	18,270	15,190
	R*DS010L4A**	3YS3F33KE	62,570	55,310	47,590	40,580	34,580	29,150	24,550	20,340	16,910
	R*DS012L4A**	4YBNF40KE	75,160	66,700	57,290	48,990	41,940	35,430	29,920	24,790	20,590
	R*DS015L4A**	4YHNF46KE	85,250	75,650	65,750	55,980	48,170	40,760	34,470	28,670	23,870
	R*DS022L4A**	4YJDF59KE	103,910	92,770	80,300	68,660	58,960	50,020	42,430	35,370	29,420
95°	R*DS003L4A**	2YF3F13KE	25,010	22,010	18,870	16,050	13,730	11,530	9,720	8,060	6,690
	R*DS004L4A**	2YL3F15KE	27,720	24,410	20,910	17,850	15,230	12,810	10,800	8,990	7,480
	R*DS005L4A**	2YA3F17KE	31,080	27,360	23,480	20,060	17,170	14,450	12,160	10,090	8,360
	R*DS006L4A**	3YA3F21KE	39,080	34,270	29,140	24,740	21,080	17,590	14,770	12,210	10,100
	R*DS008L4A**	3YB3F24KE	45,720	40,160	34,330	29,030	24,700	20,690	17,410	14,420	12,000
	R*DS009L4A**	3YF3F29K0	53,840	47,600	40,860	34,730	29,480	24,730	20,810	17,270	14,360
	R*DS010L4A**	3YS3F33KE	59,850	52,710	45,180	38,520	32,830	27,550	23,180	19,180	15,940
	R*DS012L4A**	4YBNF40KE	70,790	63,500	54,560	46,670	39,960	33,530	28,180	23,360	19,410
	R*DS015L4A**	4YHNF46KE	81,310	72,180	62,310	53,390	45,690	38,520	32,460	26,990	22,480
	R*DS022L4A**	4YJDF59KE	98,860	88,790	76,130	65,190	55,970	47,230	39,950	33,290	27,830
100°	R*DS003L4A**	2YF3F13KE	24,020	20,980	17,920	15,240	13,100	10,980	9,240	7,650	6,370
	R*DS004L4A**	2YL3F15KE	26,730	23,290	19,900	16,940	14,580	12,230	10,300	8,530	7,110
	R*DS005L4A**	2YA3F17KE	29,930	26,040	22,340	19,020	16,410	13,780	11,620	9,600	7,950
	R*DS006L4A**	3YA3F21KE	37,550	32,610	27,710	23,480	20,040	16,770	14,050	11,600	9,540
	R*DS008L4A**	3YB3F24KE	44,030	38,260	32,470	27,530	23,650	19,740	16,570	13,700	11,400
	R*DS009L4A**	3YF3F29K0	51,830	45,230	38,630	32,860	28,230	23,590	19,810	16,390	13,630
	R*DS010L4A**	3YS3F33KE	57,730	50,190	42,980	36,540	31,350	26,230	22,030	18,260	15,150
	R*DS012L4A**	4YBNF40KE	68,240	60,370	51,840	44,170	38,100	31,940	26,900	22,160	18,560
	R*DS015L4A**	4YHNF46KE	77,790	68,660	59,060	50,300	43,580	36,730	30,870	25,640	21,310
	R*DS022L4A**	4YJDF59KE	94,730	83,860	72,180	61,760	53,430	45,130	38,060	31,720	26,320
110°	R*DS003L4A**	2YF3F13KE	21,930	19,210	16,420	13,920	11,760	9,930	8,250	6,870	5,690
	R*DS004L4A**	2YL3F15KE	24,380	21,320	18,190	15,430	13,050	11,020	9,160	7,650	6,360
	R*DS005L4A**	2YA3F17KE	27,170	23,800	20,330	17,280	14,690	12,430	10,350	8,640	7,170
	R*DS006L4A**	3YA3F21KE	34,030	29,660	25,190	21,060	17,930	15,090	12,510	10,430	8,620
	R*DS008L4A**	3YB3F24KE	40,060	34,980	29,670	25,010	21,090	17,750	14,720	12,250	10,200
	R*DS009L4A**	3YF3F29K0	47,160	41,500	35,350	29,920	25,180	21,200	17,610	14,650	12,210
	R*DS010L4A**	3YS3F33KE	51,860	45,940	39,150	33,060	28,020	23,570	19,560	16,310	13,610
	R*DS012L4A**	4YBNF40KE	62,580	55,090	47,160	39,960	33,990	28,630	23,790	19,850	16,560
	R*DS015L4A**	4YHNF46KE	70,850	62,610	53,500	45,770	38,850	32,990	27,470	22,900	19,030
	R*DS022L4A**	4YJDF59KE	86,470	76,490	65,800	55,970	47,740	40,510	33,780	28,150	23,500

Additional Compressor Cooling Required†

* Each asterisk represents a variable character based upon model, voltage, and vintage ordered. See page 4 for nomenclature.

‡ Multiply capacity by .83 when used with 50 Hz power.

Liquid injection standard.

CAPACITY DATA (BTUH)

LOW TEMPERATURE // R455A DISCUS // 60 HZ‡

Ambient Temp. (°F)	Model No.	Comp. Model No.	Suction Temperature (°F)								
			0°	-5°	-10°	-15°	-20°	-25°	-30°	-35°	-40°
90°	R*DS003L4A**	2YF3F13KE	27,150	23,800	20,360	17,290	14,710	12,320	10,350	8,580	7,150
	R*DS004L4A**	2YL3F15KE	30,090	26,440	22,560	19,180	16,310	13,670	11,480	9,550	7,950
	R*DS005L4A**	2YA3F17KE	33,780	29,700	25,440	21,650	18,480	15,460	12,980	10,750	8,860
	R*DS006L4A**	3YA3F21KE	41,880	36,950	31,270	26,460	22,450	18,760	15,630	12,820	10,670
	R*DS008L4A**	3YB3F24KE	49,470	43,360	36,980	31,150	26,500	22,150	18,540	15,360	12,790
	R*DS009L4A**	3YF3F29K0	58,680	51,460	44,000	37,290	31,710	26,510	22,220	18,360	15,250
	R*DS010L4A**	3YS3F33KE	64,910	57,080	48,900	41,540	35,330	29,540	24,730	20,440	16,980
	R*DS012L4A**	4YBNF40KE	78,180	67,920	59,260	50,480	42,970	35,920	30,100	24,900	20,750
	R*DS015L4A**	4YHNF46KE	88,210	78,770	66,630	58,100	49,030	41,530	34,860	28,850	24,060
	R*DS022L4A**	4YJDF59KE	108,310	96,670	83,420	70,890	60,840	51,300	43,150	35,680	29,760
95°	R*DS003L4A**	2YF3F13KE	25,860	22,710	19,400	16,450	13,950	11,660	9,770	8,100	6,750
	R*DS004L4A**	2YL3F15KE	28,780	25,180	21,490	18,250	15,490	12,960	10,890	9,020	7,520
	R*DS005L4A**	2YA3F17KE	32,340	28,340	24,280	20,560	17,530	14,660	12,310	10,160	8,430
	R*DS006L4A**	3YA3F21KE	40,120	35,050	29,740	25,110	21,220	17,690	14,790	12,140	10,140
	R*DS008L4A**	3YB3F24KE	47,040	41,190	35,160	29,660	25,190	20,960	17,540	14,520	12,070
	R*DS009L4A**	3YF3F29K0	55,880	48,890	41,760	35,410	30,070	25,070	20,980	17,340	14,420
	R*DS010L4A**	3YS3F33KE	61,350	54,430	46,480	39,380	33,480	27,950	23,390	19,310	16,060
	R*DS012L4A**	4YBNF40KE	74,570	65,920	56,360	47,900	40,720	33,950	28,430	23,500	19,590
	R*DS015L4A**	4YHNF46KE	84,730	75,220	64,640	55,100	46,900	39,270	32,850	27,170	22,560
	R*DS022L4A**	4YJDF59KE	103,180	91,990	79,280	67,250	57,420	48,470	40,720	33,610	28,020
100°	R*DS003L4A**	2YF3F13KE	24,930	21,690	18,450	15,650	13,350	11,130	9,320	7,710	6,380
	R*DS004L4A**	2YL3F15KE	27,700	23,980	20,450	17,310	14,800	12,360	10,370	8,580	7,160
	R*DS005L4A**	2YA3F17KE	30,960	26,890	22,990	19,480	16,740	13,980	11,730	9,690	8,040
	R*DS006L4A**	3YA3F21KE	38,510	33,270	28,210	23,790	20,230	16,860	14,120	11,580	9,680
	R*DS008L4A**	3YB3F24KE	45,530	39,360	33,360	28,140	23,980	19,980	16,670	13,800	11,470
	R*DS009L4A**	3YF3F29K0	53,850	46,720	39,720	33,630	28,670	23,870	19,970	16,510	13,650
	R*DS010L4A**	3YS3F33KE	59,520	51,610	44,180	37,380	31,860	26,600	22,230	18,320	15,180
	R*DS012L4A**	4YBNF40KE	71,460	62,400	53,460	45,420	38,670	32,290	27,000	22,280	18,650
	R*DS015L4A**	4YHNF46KE	80,960	70,550	61,290	52,520	44,590	37,430	31,290	25,730	21,350
	R*DS022L4A**	4YJDF59KE	99,370	87,170	75,160	63,710	54,730	46,020	38,620	31,840	26,580
110°	R*DS003L4A**	2YF3F13KE	22,800	19,980	16,920	14,280	12,020	10,090	8,320	6,920	5,730
	R*DS004L4A**	2YL3F15KE	25,300	22,090	18,740	15,800	13,310	11,170	9,250	7,710	6,400
	R*DS005L4A**	2YA3F17KE	28,070	24,630	20,950	17,710	14,990	12,640	10,480	8,750	7,290
	R*DS006L4A**	3YA3F21KE	34,690	30,290	25,570	21,510	18,130	15,210	12,630	10,530	8,890
	R*DS008L4A**	3YB3F24KE	41,390	36,130	30,410	25,530	21,460	17,970	14,810	12,250	10,280
	R*DS009L4A**	3YF3F29K0	48,900	42,750	36,150	30,430	25,590	21,450	17,720	14,650	12,290
	R*DS010L4A**	3YS3F33KE	53,990	47,330	40,140	33,840	28,430	23,870	19,720	16,410	13,700
	R*DS012L4A**	4YBNF40KE	64,790	57,020	48,550	40,980	34,450	28,940	23,900	19,920	16,700
	R*DS015L4A**	4YHNF46KE	73,600	64,910	55,650	47,100	39,680	33,440	27,590	22,790	18,930
	R*DS022L4A**	4YJDF59KE	90,340	79,940	68,190	57,830	49,020	41,350	34,360	28,440	23,620

Additional Compressor Cooling Required†

* Each asterisk represents a variable character based upon model, voltage, and vintage ordered. See page 4 for nomenclature.

‡ Multiply capacity by .83 when used with 50 Hz power.

Liquid injection standard.

CAPACITY DATA (BTUH)

LOW TEMPERATURE // R404A DISCUS // 60 HZ‡

Ambient Temp. (°F)	Model No.	Comp. Model No.	Suction Temperature (°F)								
			0°	-5°	-10°	-15°	-20°	-25°	-30°	-35°	-40°
90°	R*DS003L4A**	2YF3F13KE	35,280	31,600	28,110	24,900	21,870	19,090	16,500	14,260	12,020
	R*DS004L4A**	2YL3F15KE	39,640	35,620	31,810	28,240	24,930	21,800	18,930	16,380	13,820
	R*DS005L4A**	2YA3F17KE	44,120	39,810	35,730	31,910	28,310	24,980	21,800	18,940	16,080
	R*DS006L4A**	3YA3F21KE	56,280	50,440	45,080	39,920	35,260	30,940	26,950	23,530	20,120
	R*DS008L4A**	3YB3F24KE	65,350	58,680	52,370	46,700	41,290	36,250	31,670	27,570	23,460
	R*DS009L4A**	3YF3F29K0	78,650	70,630	63,110	56,130	49,650	43,680	38,140	33,280	28,420
	R*DS010L4A**	3YS3F33KE	85,730	77,730	70,040	62,610	55,740	49,320	43,270	37,910	32,550
	R*DS012L4A**	4YBNF40KE	96,560	87,120	78,610	70,410	62,890	55,620	48,880	42,270	35,650
	R*DS015L4A**	4YHNF46KE	109,880	99,790	90,460	81,520	73,340	65,110	57,520	50,010	42,490
	R*DS022L4A**	4YJDF59KE	131,710	119,780	108,840	98,210	88,030	78,160	68,700	59,520	50,330
95°	R*DS003L4A**	2YF3F13KE	33,370	29,850	26,520	23,400	20,480	17,790	15,260	13,020	10,790
	R*DS004L4A**	2YL3F15KE	37,570	33,710	30,060	26,640	23,460	20,450	17,680	15,200	12,710
	R*DS005L4A**	2YA3F17KE	41,860	37,740	33,820	30,160	26,700	23,490	20,430	17,650	14,870
	R*DS006L4A**	3YA3F21KE	53,650	48,040	42,900	37,930	33,440	29,250	25,370	22,020	18,670
	R*DS008L4A**	3YB3F24KE	62,350	55,970	49,920	44,480	39,270	34,400	29,970	25,950	21,930
	R*DS009L4A**	3YF3F29K0	75,090	67,390	60,170	53,460	47,220	41,450	36,080	31,350	26,630
	R*DS010L4A**	3YS3F33KE	81,860	74,200	66,850	59,720	53,110	46,910	41,080	35,880	30,690
	R*DS012L4A**	4YBNF40KE	91,910	82,840	74,670	66,760	59,440	52,370	45,690	39,070	32,450
	R*DS015L4A**	4YHNF46KE	104,570	94,840	85,810	77,150	69,230	61,250	53,850	46,530	39,210
	R*DS022L4A**	4YJDF59KE	125,300	113,790	103,250	92,970	83,120	73,550	64,340	55,370	46,390
100°	R*DS003L4A**	2YF3F13KE	31,450	28,120	24,920	21,960	19,160	16,540	14,050	11,800	9,560
	R*DS004L4A**	2YL3F15KE	35,500	31,810	28,320	25,030	21,990	19,100	16,430	14,020	11,610
	R*DS005L4A**	2YA3F17KE	39,590	35,640	31,920	28,410	25,090	22,010	19,060	16,350	13,640
	R*DS006L4A**	3YA3F21KE	51,020	45,640	40,700	35,930	31,590	27,540	23,760	20,480	17,190
	R*DS008L4A**	3YB3F24KE	59,350	53,250	47,480	42,250	37,230	32,540	28,230	24,300	20,370
	R*DS009L4A**	3YF3F29K0	71,510	64,150	57,240	50,790	44,790	39,210	34,030	29,430	24,840
	R*DS010L4A**	3YS3F33KE	77,920	70,590	63,560	56,730	50,380	44,440	38,790	33,750	28,710
	R*DS012L4A**	4YBNF40KE	87,220	78,550	70,700	63,050	55,940	49,030	42,440	35,820	29,210
	R*DS015L4A**	4YHNF46KE	99,350	90,000	81,300	72,940	65,250	57,520	50,340	43,200	36,070
	R*DS022L4A**	4YJDF59KE	118,950	107,910	97,730	87,810	78,260	68,960	59,980	51,180	42,390
110°	R*DS003L4A**	2YF3F13KE	28,020	24,780	21,770	19,020	16,420	13,940	11,560	9,270	6,980
	R*DS004L4A**	2YL3F15KE	31,340	27,990	24,820	21,840	19,050	16,390	13,930	11,680	9,430
	R*DS005L4A**	2YA3F17KE	35,080	31,500	28,120	24,920	21,880	19,050	16,310	13,770	11,230
	R*DS006L4A**	3YA3F21KE	45,690	40,790	36,240	31,820	27,790	24,000	20,440	17,280	14,120
	R*DS008L4A**	3YB3F24KE	53,380	47,830	42,560	37,780	33,130	28,750	24,710	20,950	17,190
	R*DS009L4A**	3YF3F29K0	64,330	57,640	51,340	45,410	39,900	34,750	29,920	25,600	21,280
	R*DS010L4A**	3YS3F33KE	69,820	63,150	56,740	50,480	44,620	39,150	33,900	29,170	24,430
	R*DS012L4A**	4YBNF40KE	77,730	69,810	62,600	55,470	48,780	42,130	35,740	29,160	22,580
	R*DS015L4A**	4YHNF46KE	89,220	80,640	72,630	64,920	57,750	50,530	43,790	37,060	30,330
	R*DS022L4A**	4YJDF59KE	106,480	96,270	86,830	77,560	68,580	59,840	51,280	42,800	34,330

* Each asterisk represents a variable character based upon model, voltage, and vintage ordered. See page 4 for nomenclature.

‡ Multiply capacity by .83 when used with 50 Hz power.

Liquid injection standard.

CAPACITY DATA (BTUH)

LOW TEMPERATURE // R407A DISCUS // 60 HZ‡

Ambient Temp. (°F)	Model No.	Comp. Model No.	Suction Temperature (°F)								
			0°	-5°	-10°	-15°	-20°	-25°	-30°	-35°	-40°
90°	R*DS003L4A**	2YF3F13KE	29,020	25,170	21,810	18,770	16,060	13,630	11,400	9,400	7,410
	R*DS004L4A**	2YL3F15KE	33,710	29,710	25,960	22,470	19,250	16,160	13,470	11,140	8,820
	R*DS005L4A**	2YA3F17KE	38,630	34,010	29,750	25,830	22,170	18,810	15,710	12,960	10,200
	R*DS006L4A**	3YA3F21KE	49,550	43,390	37,760	32,670	27,960	23,860	19,920	16,390	12,860
	R*DS008L4A**	3YB3F24KE	58,750	51,830	45,610	39,800	34,530	29,700	25,240	20,880	16,510
	R*DS009L4A**	3YF3F29K0	71,140	62,630	54,840	47,590	41,020	34,980	29,310	24,010	18,710
	R*DS010L4A**	3YS3F33KE	77,430	68,070	59,680	51,850	44,670	38,070	31,910	26,170	20,420
	R*DS012L4A**	4YBNF40KE	87,640	77,890	68,690	59,780	51,430	43,630	36,250	29,780	23,320
	R*DS015L4A**	4YHNF46KE	98,110	87,630	78,420	69,190	60,020	52,160	44,160	37,310	30,460
	R*DS022L4A**	4YJDF59KE	125,340	110,010	96,160	83,750	73,120	62,640	54,070	47,530	41,000
95°	R*DS003L4A**	2YF3F13KE	27,620	23,860	20,590	17,630	15,000	12,660	10,480	8,490	6,490
	R*DS004L4A**	2YL3F15KE	32,070	28,240	24,560	21,180	18,020	15,110	12,470	10,240	8,010
	R*DS005L4A**	2YA3F17KE	36,690	32,270	28,110	24,310	20,790	17,540	14,580	12,020	9,460
	R*DS006L4A**	3YA3F21KE	47,230	41,260	35,770	30,780	26,230	22,180	18,310	14,770	11,230
	R*DS008L4A**	3YB3F24KE	56,130	49,310	43,180	37,470	32,300	27,500	23,020	18,710	14,400
	R*DS009L4A**	3YF3F29K0	68,070	59,680	51,990	44,840	38,390	32,450	26,890	21,760	16,640
	R*DS010L4A**	3YS3F33KE	73,960	64,800	56,570	48,910	41,890	35,440	29,430	23,800	18,180
	R*DS012L4A**	4YBNF40KE	83,720	74,220	65,290	56,650	48,520	40,920	33,690	27,310	20,930
	R*DS015L4A**	4YHNF46KE	93,470	83,860	74,940	66,010	57,160	49,490	41,740	35,060	28,370
	R*DS022L4A**	4YJDF59KE	118,970	105,230	91,770	79,710	69,480	59,440	51,250	45,120	38,990
100°	R*DS003L4A**	2YF3F13KE	26,230	22,580	19,380	16,520	13,990	11,710	9,600	7,620	5,640
	R*DS004L4A**	2YL3F15KE	30,430	26,680	23,160	19,850	16,880	14,050	11,520	9,350	7,180
	R*DS005L4A**	2YA3F17KE	34,400	30,470	26,430	22,780	19,350	16,290	13,480	11,110	8,750
	R*DS006L4A**	3YA3F21KE	44,890	39,090	33,740	28,870	24,430	20,450	16,620	13,060	9,510
	R*DS008L4A**	3YB3F24KE	53,550	46,840	40,800	35,170	30,150	25,350	21,030	16,670	12,300
	R*DS009L4A**	3YF3F29K0	65,020	56,720	49,140	42,110	35,760	29,960	24,590	19,570	14,550
	R*DS010L4A**	3YS3F33KE	70,380	61,460	53,420	45,950	39,040	32,790	27,020	21,480	15,930
	R*DS012L4A**	4YBNF40KE	79,670	70,480	61,820	53,420	45,510	38,050	31,170	24,870	18,560
	R*DS015L4A**	4YHNF46KE	89,360	80,050	71,400	62,790	54,210	46,780	39,240	32,710	26,180
	R*DS022L4A**	4YJDF59KE	113,570	100,280	87,250	75,610	65,730	56,120	48,340	42,600	36,850
110°	R*DS003L4A**	2YF3F13KE	23,680	20,110	17,060	14,390	12,040	9,920	7,940	5,980	4,030
	R*DS004L4A**	2YL3F15KE	27,100	23,600	20,340	17,280	14,550	11,960	9,660	7,610	5,550
	R*DS005L4A**	2YA3F17KE	30,730	26,720	23,030	19,690	16,620	13,840	11,330	9,280	7,220
	R*DS006L4A**	3YA3F21KE	40,190	34,750	29,660	25,060	20,800	16,960	13,230	9,620	6,000
	R*DS008L4A**	3YB3F24KE	48,640	42,130	36,260	30,780	25,820	21,190	16,870	12,450	8,030
	R*DS009L4A**	3YF3F29K0	59,000	50,930	43,580	36,770	30,660	25,060	19,980	15,250	10,530
	R*DS010L4A**	3YS3F33KE	63,170	54,700	47,080	39,940	33,440	27,630	22,180	16,950	11,720
	R*DS012L4A**	4YBNF40KE	71,380	62,760	54,600	46,660	39,180	32,300	25,570	19,510	13,440
	R*DS015L4A**	4YHNF46KE	80,990	72,350	64,290	56,220	48,200	41,200	34,060	27,830	21,610
	R*DS022L4A**	4YJDF59KE	102,680	90,230	78,030	67,180	57,980	49,190	42,200	37,170	32,150

* Each asterisk represents a variable character based upon model, voltage, and vintage ordered. See page 4 for nomenclature.

‡ Multiply capacity by .83 when used with 50 Hz power.

Liquid injection standard.

CAPACITY DATA (BTUH)

LOW TEMPERATURE // R407C DISCUS // 60 HZ‡

Ambient Temp. (°F)	Model No.	Comp. Model No.	Suction Temperature (°F)								
			0°	-5°	-10°	-15°	-20°	-25°	-30°	-35°	-40°
90°	R*DS003L4A**	2YF3F13KE	22,790	19,520	16,640	14,040	11,710	9,650	7,750	6,020	4,280
	R*DS004L4A**	2YL3F15KE	29,110	25,360	21,870	18,640	15,630	12,820	10,330	8,190	6,050
	R*DS005L4A**	2YA3F17KE	33,520	29,200	25,230	21,540	18,160	15,040	12,180	9,670	7,150
	R*DS006L4A**	3YA3F21KE	43,600	37,730	32,350	27,450	22,900	18,860	15,190	12,050	8,900
	R*DS008L4A**	3YB3F24KE	51,750	45,130	39,060	33,470	28,330	23,750	19,500	15,690	11,880
	R*DS009L4A**	3YF3F29K0	60,780	53,780	46,890	40,200	33,770	27,850	22,380	17,870	13,350
	R*DS010L4A**	3YS3F33KE	64,030	56,400	49,150	42,280	35,790	29,650	24,030	19,030	14,030
	R*DS012L4A**	4YBNF40KE	77,010	67,410	58,570	50,450	42,930	36,080	29,810	24,130	18,450
	R*DS015L4A**	4YHNF46KE	88,400	78,210	68,810	60,110	52,050	44,630	37,790	31,750	25,710
	R*DS022L4A**	4YJDF59KE	105,060	91,560	79,890	69,810	61,010	53,140	45,900	38,870	31,830
95°	R*DS003L4A**	2YF3F13KE	21,680	18,510	15,710	13,190	10,940	8,960	7,120	5,440	3,750
	R*DS004L4A**	2YL3F15KE	27,700	24,100	20,690	17,580	14,630	11,990	9,570	7,530	5,490
	R*DS005L4A**	2YA3F17KE	31,840	27,710	23,840	20,270	17,030	14,030	11,310	8,970	6,630
	R*DS006L4A**	3YA3F21KE	41,560	35,880	30,640	25,860	21,490	17,530	13,960	10,870	7,770
	R*DS008L4A**	3YB3F24KE	49,430	42,940	36,980	31,510	26,490	21,990	17,780	14,070	10,360
	R*DS009L4A**	3YF3F29K0	58,160	51,250	44,450	37,890	31,600	25,840	20,540	16,210	11,870
	R*DS010L4A**	3YS3F33KE	61,160	53,690	46,590	39,880	33,560	27,600	22,160	17,330	12,490
	R*DS012L4A**	4YBNF40KE	73,570	64,230	55,680	47,800	40,510	33,840	27,710	22,140	16,560
	R*DS015L4A**	4YHNF46KE	84,220	74,850	65,760	57,340	49,570	42,350	35,720	29,830	23,940
	R*DS022L4A**	4YJDF59KE	99,720	87,580	76,230	66,450	57,970	50,430	43,510	36,890	30,270
100°	R*DS003L4A**	2YF3F13KE	20,700	17,640	14,910	12,480	10,300	8,360	6,550	4,860	3,170
	R*DS004L4A**	2YL3F15KE	26,410	22,930	19,680	16,620	13,830	11,220	8,860	6,830	4,800
	R*DS005L4A**	2YA3F17KE	30,000	26,340	22,610	19,170	16,000	13,120	10,470	8,220	5,970
	R*DS006L4A**	3YA3F21KE	39,680	34,150	29,040	24,360	20,080	16,210	12,700	9,650	6,600
	R*DS008L4A**	3YB3F24KE	47,300	40,900	35,030	29,630	24,760	20,270	16,210	12,520	8,820
	R*DS009L4A**	3YF3F29K0	56,000	49,020	42,210	35,680	29,480	23,860	18,800	14,690	10,570
	R*DS010L4A**	3YS3F33KE	58,690	51,300	44,270	37,670	31,430	25,670	20,490	15,860	11,220
	R*DS012L4A**	4YBNF40KE	70,310	61,190	52,820	45,110	37,970	31,400	25,530	20,030	14,530
	R*DS015L4A**	4YHNF46KE	80,900	71,700	62,790	54,580	46,960	39,920	33,410	27,640	21,860
	R*DS022L4A**	4YJDF59KE	95,670	84,060	73,160	63,740	55,530	48,180	41,380	34,750	28,110
110°	R*DS003L4A**	2YF3F13KE	19,070	16,060	13,410	11,030	8,870	6,880	5,000	3,260	1,510
	R*DS004L4A**	2YL3F15KE	24,000	20,740	17,640	14,680	11,910	9,290	6,870	4,740	2,610
	R*DS005L4A**	2YA3F17KE	27,360	23,610	20,110	16,800	13,730	10,830	8,140	5,840	3,540
	R*DS006L4A**	3YA3F21KE	35,860	30,600	25,650	21,160	16,990	13,240	9,820	6,840	3,850
	R*DS008L4A**	3YB3F24KE	43,260	36,980	31,200	25,870	21,000	16,610	12,580	8,950	5,310
	R*DS009L4A**	3YF3F29K0	52,010	44,750	37,780	31,190	25,100	19,690	15,050	11,560	8,070
	R*DS010L4A**	3YS3F33KE	53,730	46,340	39,400	32,910	26,950	21,630	16,890	12,910	8,930
	R*DS012L4A**	4YBNF40KE	63,770	54,880	46,730	39,210	32,290	26,080	20,230	14,900	9,570
	R*DS015L4A**	4YHNF46KE	74,260	65,270	56,600	48,570	41,170	34,310	27,950	22,290	16,630
	R*DS022L4A**	4YJDF59KE	88,250	77,630	67,510	58,650	50,700	43,370	36,290	28,880	21,460

* Each asterisk represents a variable character based upon model, voltage, and vintage ordered. See page 4 for nomenclature.

‡ Multiply capacity by .83 when used with 50 Hz power.

Liquid injection standard.

CAPACITY DATA (BTUH)

LOW TEMPERATURE // R407F DISCUS // 60 HZ‡

Ambient Temp. (°F)	Model No.	Comp. Model No.	Suction Temperature (°F)								
			0°	-5°	-10°	-15°	-20°	-25°	-30°	-35°	-40°
90°	R*DS003L4A**	2YF3F13KE	24,920	21,270	18,060	15,190	12,640	10,390	8,330	6,470	4,600
	R*DS004L4A**	2YL3F15KE	31,830	27,620	23,730	20,160	16,860	13,810	11,120	8,820	6,510
	R*DS005L4A**	2YA3F17KE	36,660	31,800	27,370	23,290	19,590	16,200	13,110	10,410	7,700
	R*DS006L4A**	3YA3F21KE	46,990	40,590	34,870	29,780	25,100	20,940	17,100	13,600	10,090
	R*DS008L4A**	3YB3F24KE	55,700	48,510	42,100	36,320	31,060	26,370	21,920	17,630	13,340
	R*DS009L4A**	3YF3F29K0	67,020	58,500	50,690	43,520	36,880	30,860	25,230	20,150	15,070
	R*DS010L4A**	3YS3F33KE	71,570	62,390	54,080	46,530	39,610	33,160	27,220	21,640	16,060
	R*DS012L4A**	4YBNF40KE	82,330	72,940	64,070	55,700	47,790	40,450	33,650	27,490	21,320
	R*DS015L4A**	4YHNF46KE	94,550	84,630	75,240	66,340	57,930	50,040	42,680	36,150	29,620
	R*DS022L4A**	4YJDF59KE	123,010	108,260	94,690	82,400	71,380	61,650	53,270	46,980	40,690
95°	R*DS003L4A**	2YF3F13KE	23,710	20,160	17,050	14,270	11,810	9,650	7,660	5,850	4,030
	R*DS004L4A**	2YL3F15KE	30,290	26,250	22,450	19,010	15,780	12,910	10,300	8,110	5,910
	R*DS005L4A**	2YA3F17KE	34,820	30,170	25,860	21,920	18,370	15,110	12,170	9,660	7,140
	R*DS006L4A**	3YA3F21KE	44,790	38,600	33,030	28,060	23,550	19,470	15,720	12,270	8,810
	R*DS008L4A**	3YB3F24KE	53,210	46,150	39,860	34,190	29,050	24,420	19,990	15,810	11,630
	R*DS009L4A**	3YF3F29K0	64,130	55,740	48,050	41,010	34,510	28,630	23,150	18,280	13,400
	R*DS010L4A**	3YS3F33KE	68,360	59,390	51,260	43,890	37,150	30,870	25,100	19,700	14,300
	R*DS012L4A**	4YBNF40KE	78,650	69,500	60,900	52,780	45,090	37,940	31,280	25,210	19,140
	R*DS015L4A**	4YHNF46KE	90,080	80,990	71,900	63,290	55,170	47,480	40,340	33,970	27,590
	R*DS022L4A**	4YJDF59KE	116,760	103,560	90,360	78,430	67,830	58,500	50,500	44,600	38,690
100°	R*DS003L4A**	2YF3F13KE	22,520	19,080	16,050	13,370	11,010	8,930	7,020	5,260	3,500
	R*DS004L4A**	2YL3F15KE	28,740	24,800	21,170	17,810	14,780	12,000	9,510	7,410	5,300
	R*DS005L4A**	2YA3F17KE	32,650	28,490	24,320	20,540	17,100	14,030	11,250	8,930	6,600
	R*DS006L4A**	3YA3F21KE	42,570	36,570	31,160	26,320	21,930	17,950	14,270	10,870	7,460
	R*DS008L4A**	3YB3F24KE	50,770	43,840	37,660	32,090	27,120	22,510	18,260	14,100	9,940
	R*DS009L4A**	3YF3F29K0	61,250	52,980	45,420	38,510	32,150	26,430	21,170	16,450	11,720
	R*DS010L4A**	3YS3F33KE	65,050	56,330	48,410	41,240	34,620	28,560	23,050	17,790	12,530
	R*DS012L4A**	4YBNF40KE	74,840	66,000	57,660	49,770	42,290	35,280	28,940	22,960	16,970
	R*DS015L4A**	4YHNF46KE	86,120	77,310	68,510	60,200	52,320	44,880	37,920	31,690	25,460
	R*DS022L4A**	4YJDF59KE	111,460	98,690	85,910	74,390	64,170	55,240	47,630	42,100	36,570
110°	R*DS003L4A**	2YF3F13KE	20,330	16,990	14,130	11,650	9,480	7,560	5,800	4,150	2,500
	R*DS004L4A**	2YL3F15KE	25,590	21,940	18,590	15,510	12,740	10,220	7,980	6,040	4,100
	R*DS005L4A**	2YA3F17KE	29,170	24,980	21,190	17,750	14,690	11,920	9,460	7,460	5,450
	R*DS006L4A**	3YA3F21KE	38,110	32,510	27,390	22,850	18,670	14,890	11,360	8,040	4,710
	R*DS008L4A**	3YB3F24KE	46,110	39,430	33,470	28,090	23,220	18,810	14,650	10,570	6,490
	R*DS009L4A**	3YF3F29K0	55,580	47,570	40,280	33,630	27,560	22,110	17,200	12,840	8,480
	R*DS010L4A**	3YS3F33KE	58,390	50,130	42,660	35,840	29,650	24,070	18,920	14,070	9,220
	R*DS012L4A**	4YBNF40KE	67,060	58,770	50,930	43,470	36,410	29,950	23,740	18,020	12,290
	R*DS015L4A**	4YHNF46KE	78,050	69,870	61,690	53,900	46,520	39,530	32,920	26,970	21,010
	R*DS022L4A**	4YJDF59KE	100,770	88,800	76,830	66,100	56,600	48,420	41,580	36,740	31,900

* Each asterisk represents a variable character based upon model, voltage, and vintage ordered. See page 4 for nomenclature.

‡ Multiply capacity by .83 when used with 50 Hz power.

Liquid injection standard.

CAPACITY DATA (BTUH)

LOW TEMPERATURE // R448A, R449A DISCUS // 60 HZ‡

Ambient Temp. (°F)	Model No.	Comp. Model No.	Suction Temperature (°F)								
			0°	-5°	-10°	-15°	-20°	-25°	-30°	-35°	-40°
90°	R*DS003L4A**	2YF3F13KE	29,890	25,950	22,470	19,350	16,580	14,090	11,900	10,020	8,150
	R*DS004L4A**	2YL3F15KE	34,730	30,520	26,770	23,170	19,900	16,690	14,060	11,850	9,650
	R*DS005L4A**	2YA3F17KE	39,700	34,980	30,640	26,670	22,920	19,420	16,270	13,350	10,440
	R*DS006L4A**	3YA3F21KE	51,180	44,810	38,920	33,630	28,850	24,660	20,950	18,050	15,140
	R*DS008L4A**	3YB3F24KE	60,560	53,470	46,950	41,030	35,570	30,720	26,270	22,130	17,990
	R*DS009L4A**	3YF3F29K0	73,280	64,300	56,470	49,160	42,440	36,130	30,520	25,390	20,250
	R*DS010L4A**	3YS3F33KE	79,720	70,190	61,460	53,460	46,180	39,280	33,140	27,640	22,150
	R*DS012L4A**	4YBNF40KE	90,130	80,260	70,720	61,690	53,100	45,120	37,720	31,530	25,340
	R*DS015L4A**	4YHNF46KE	100,260	90,030	80,110	70,970	62,170	53,630	45,360	37,750	30,150
	R*DS022L4A**	4YJDF59KE	127,670	112,760	98,970	86,720	75,640	64,690	54,740	44,160	33,590
95°	R*DS003L4A**	2YF3F13KE	28,440	24,600	21,210	18,170	15,490	13,090	10,950	9,040	7,130
	R*DS004L4A**	2YL3F15KE	33,050	29,010	25,320	21,850	18,620	15,600	13,020	10,890	8,750
	R*DS005L4A**	2YA3F17KE	37,710	33,200	28,940	25,100	21,500	18,110	15,110	12,390	9,680
	R*DS006L4A**	3YA3F21KE	48,780	42,610	36,870	31,690	27,070	22,920	19,260	16,240	13,220
	R*DS008L4A**	3YB3F24KE	57,860	50,870	44,450	38,620	33,270	28,450	23,960	19,820	15,690
	R*DS009L4A**	3YF3F29K0	70,120	61,270	53,530	46,330	39,720	33,520	28,000	23,000	18,010
	R*DS010L4A**	3YS3F33KE	76,150	66,810	58,260	50,430	43,310	36,570	30,560	25,140	19,720
	R*DS012L4A**	4YBNF40KE	86,100	76,470	67,220	58,450	50,100	42,320	35,050	28,900	22,750
	R*DS015L4A**	4YHNF46KE	95,520	86,160	76,550	67,710	59,210	50,890	42,870	35,480	28,090
	R*DS022L4A**	4YJDF59KE	121,170	107,870	94,440	82,540	71,870	61,380	51,900	41,910	31,930
100°	R*DS003L4A**	2YF3F13KE	27,070	23,330	20,000	17,040	14,450	12,120	10,030	8,120	6,220
	R*DS004L4A**	2YL3F15KE	31,410	27,450	23,920	20,500	17,460	14,520	12,030	9,940	7,850
	R*DS005L4A**	2YA3F17KE	35,410	31,400	27,250	23,550	20,010	16,800	13,910	11,370	8,820
	R*DS006L4A**	3YA3F21KE	46,460	40,440	34,830	29,750	25,240	21,170	17,550	14,490	11,440
	R*DS008L4A**	3YB3F24KE	55,300	48,400	42,060	36,280	31,080	26,230	21,890	17,670	13,450
	R*DS009L4A**	3YF3F29K0	67,090	58,340	50,680	43,540	37,020	30,940	25,600	20,690	15,790
	R*DS010L4A**	3YS3F33KE	72,590	63,480	55,090	47,430	40,380	33,830	28,060	22,690	17,330
	R*DS012L4A**	4YBNF40KE	82,090	72,750	63,730	55,170	47,010	39,360	32,430	26,320	20,220
	R*DS015L4A**	4YHNF46KE	91,470	82,380	73,050	64,460	56,140	47,990	40,050	32,650	25,250
	R*DS022L4A**	4YJDF59KE	115,820	102,960	89,920	78,340	67,910	57,630	48,260	38,390	28,510
110°	R*DS003L4A**	2YF3F13KE	24,530	20,830	17,640	14,870	12,440	10,240	8,290	6,400	4,510
	R*DS004L4A**	2YL3F15KE	28,050	24,360	21,050	17,880	15,070	12,360	10,090	8,100	6,100
	R*DS005L4A**	2YA3F17KE	31,750	27,630	23,830	20,390	17,180	14,200	11,530	9,200	6,870
	R*DS006L4A**	3YA3F21KE	41,730	36,030	30,660	25,840	21,530	17,660	14,220	11,190	8,170
	R*DS008L4A**	3YB3F24KE	50,440	43,690	37,480	31,810	26,620	21,900	17,560	13,250	8,950
	R*DS009L4A**	3YF3F29K0	61,130	52,550	45,040	38,070	31,730	25,860	20,780	16,230	11,680
	R*DS010L4A**	3YS3F33KE	65,420	56,680	48,660	41,270	34,590	28,480	23,020	18,020	13,030
	R*DS012L4A**	4YBNF40KE	73,850	64,980	56,420	48,240	40,480	33,390	26,600	20,790	14,980
	R*DS015L4A**	4YHNF46KE	83,320	74,820	66,050	57,820	49,800	41,820	33,870	26,110	18,360
	R*DS022L4A**	4YJDF59KE	105,320	93,260	80,930	69,820	59,550	49,320	39,690	29,410	19,130

* Each asterisk represents a variable character based upon model, voltage, and vintage ordered. See page 4 for nomenclature.

‡ Multiply capacity by .83 when used with 50 Hz power.

Liquid injection standard.

CAPACITY DATA (BTUH)

LOW TEMPERATURE // R454A SCROLL // 60 HZ‡

Ambient Temp. (°F)	Model No.	Comp. Model No.	Suction Temperature (°F)								
			0°	-5°	-10°	-15°	-20°	-25°	-30°	-35°	-40°
90°	R*OS008L4A**	YF19KAE	42,100	38,800	34,590	30,950	28,340	25,980	22,220	19,520	17,230
	R*OS010L4A**	YF26KAE	55,330	50,150	44,350	39,020	34,440	29,920	25,710	21,230	19,640
	R*OS013L4A**	YF32KAE	66,090	60,010	53,150	46,820	41,320	36,090	31,580	27,350	23,790
	R*OS015L4A**	YF38KAE	78,640	71,650	63,680	56,240	49,670	43,450	38,080	32,950	28,720
95°	R*OS008L4A**	YF19KAE	40,410	37,170	33,400	29,900	26,950	23,890	21,340	18,710	16,460
	R*OS010L4A**	YF26KAE	53,410	48,740	42,900	37,710	33,280	28,920	25,520	21,110	18,970
	R*OS013L4A**	YF32KAE	63,870	58,040	51,370	45,340	40,040	34,880	30,530	26,330	23,010
	R*OS015L4A**	YF38KAE	75,870	69,200	61,510	54,280	48,100	41,970	36,740	31,810	27,740
100°	R*OS008L4A**	YF19KAE	39,100	35,630	32,010	28,680	26,050	23,100	20,620	18,070	15,900
	R*OS010L4A**	YF26KAE	51,920	46,640	41,290	36,260	32,430	28,140	24,600	20,480	18,480
	R*OS013L4A**	YF32KAE	62,130	55,880	49,580	43,690	39,010	33,920	29,750	25,700	22,400
	R*OS015L4A**	YF38KAE	73,950	66,660	59,240	52,350	46,810	40,800	35,760	30,950	27,030
110°	R*OS008L4A**	YF19KAE	36,030	33,120	29,800	26,670	23,960	21,450	18,950	16,730	14,690
	R*OS010L4A**	YF26KAE	48,630	44,130	39,020	34,340	30,270	26,580	23,020	20,050	17,430
	R*OS013L4A**	YF32KAE	58,300	52,760	46,870	41,310	36,450	32,030	27,800	24,280	21,120
	R*OS015L4A**	YF38KAE	69,170	62,990	55,980	49,450	43,830	38,530	33,460	29,270	25,490

Additional Compressor Cooling Required†

* Each asterisk represents a variable character based upon model, voltage, and vintage ordered. See page 4 for nomenclature.

‡ Multiply capacity by .83 when used with 50 Hz power.

Liquid injection standard.

CAPACITY DATA (BTUH)

LOW TEMPERATURE // R454C SCROLL // 60 HZ‡

Ambient Temp. (°F)	Model No.	Comp. Model No.	Suction Temperature (°F)								
			0°	-5°	-10°	-15°	-20°	-25°	-30°	-35°	-40°
90°	R*OS008L4A**	YF19KAE	32,400	29,550	26,380	23,460	20,950	18,480	16,370	14,270	12,470
	R*OS010L4A**	YF26KAE	46,480	41,940	36,920	32,320	28,370	24,500	21,310	18,280	15,830
	R*OS013L4A**	YF32KAE	55,700	50,330	44,460	38,970	34,220	29,630	25,740	22,140	19,210
	R*OS015L4A**	YF38KAE	66,620	60,400	53,310	46,720	41,210	35,660	31,060	26,680	23,160
95°	R*OS008L4A**	YF19KAE	31,020	28,360	25,250	22,440	20,040	17,660	15,670	13,650	11,920
	R*OS010L4A**	YF26KAE	44,710	40,380	35,570	31,150	27,320	23,590	20,520	17,600	15,250
	R*OS013L4A**	YF32KAE	53,800	48,590	42,870	37,520	33,000	28,490	24,820	21,320	18,460
	R*OS015L4A**	YF38KAE	64,160	58,100	51,370	45,060	39,700	34,380	29,950	25,700	22,330
100°	R*OS008L4A**	YF19KAE	29,930	27,030	24,130	21,430	19,280	17,030	15,070	13,150	11,470
	R*OS010L4A**	YF26KAE	43,560	38,960	34,280	30,030	26,520	22,900	19,900	17,090	14,820
	R*OS013L4A**	YF32KAE	52,300	46,870	41,240	36,110	31,900	27,650	24,050	20,680	17,930
	R*OS015L4A**	YF38KAE	62,420	56,050	49,430	43,410	38,510	33,350	29,040	24,970	21,650
110°	R*OS008L4A**	YF19KAE	27,430	25,000	22,300	19,810	17,610	15,680	13,750	12,090	10,530
	R*OS010L4A**	YF26KAE	40,610	36,610	32,180	28,120	24,680	21,480	18,480	16,040	13,890
	R*OS013L4A**	YF32KAE	48,770	43,980	38,770	33,920	29,670	25,950	22,350	19,390	16,810
	R*OS015L4A**	YF38KAE	58,120	52,620	46,410	40,650	35,730	31,250	27,010	23,410	20,310

Additional Compressor Cooling Required†

* Each asterisk represents a variable character based upon model, voltage, and vintage ordered. See page 4 for nomenclature.

‡ Multiply capacity by .83 when used with 50 Hz power.

Liquid injection standard.

CAPACITY DATA (BTUH)

LOW TEMPERATURE // R455A SCROLL // 60 HZ‡

Ambient Temp. (°F)	Model No.	Comp. Model No.	Suction Temperature (°F)								
			0°	-5°	-10°	-15°	-20°	-25°	-30°	-35°	-40°
90°	R*OS008L4A**	YF19KAE	35,310	32,200	28,800	25,560	22,760	20,120	17,820	15,550	13,580
	R*OS010L4A**	YF26KAE	48,800	43,990	38,700	33,900	29,720	25,730	22,380	19,300	16,690
	R*OS013L4A**	YF32KAE	58,910	53,140	46,810	40,890	35,950	31,130	27,110	23,320	20,210
	R*OS015L4A**	YF38KAE	70,430	63,770	56,130	49,270	43,310	37,520	32,720	28,140	24,440
95°	R*OS008L4A**	YF19KAE	33,800	30,880	27,520	24,510	21,830	19,240	17,040	14,860	12,960
	R*OS010L4A**	YF26KAE	47,230	42,500	37,380	32,620	28,570	24,780	21,590	18,470	16,090
	R*OS013L4A**	YF32KAE	57,000	51,220	45,190	39,380	34,530	29,970	26,090	22,540	19,400
	R*OS015L4A**	YF38KAE	68,010	61,400	54,160	47,480	41,720	36,120	31,500	27,120	23,540
100°	R*OS008L4A**	YF19KAE	32,630	29,520	26,270	23,360	21,040	18,540	16,420	14,290	12,470
	R*OS010L4A**	YF26KAE	45,990	40,950	35,960	31,420	27,820	24,060	20,970	17,960	15,620
	R*OS013L4A**	YF32KAE	55,270	49,370	43,480	37,920	33,520	29,110	25,380	21,750	18,900
	R*OS015L4A**	YF38KAE	66,140	59,110	52,080	45,600	40,550	35,100	30,610	26,350	22,880
110°	R*OS008L4A**	YF19KAE	29,860	27,250	24,270	21,550	19,190	17,060	14,940	13,130	11,450
	R*OS010L4A**	YF26KAE	42,900	38,550	33,780	29,470	25,890	22,590	19,470	16,860	14,670
	R*OS013L4A**	YF32KAE	51,420	46,330	40,780	35,610	31,280	27,350	23,580	20,510	17,820
	R*OS015L4A**	YF38KAE	61,440	55,510	48,900	42,970	37,570	32,950	28,440	24,750	21,480

Additional Compressor Cooling Required†

* Each asterisk represents a variable character based upon model, voltage, and vintage ordered. See page 4 for nomenclature.

‡ Multiply capacity by .83 when used with 50 Hz power.

Liquid injection standard.

CAPACITY DATA (BTUH)

LOW TEMPERATURE // R404A SCROLL // 60 HZ‡

Ambient Temp. (°F)	Model No.	Comp. Model No.	Suction Temperature (°F)								
			0°	-5°	-10°	-15°	-20°	-25°	-30°	-35°	-40°
90°	R*OS008L4A**	YF19KAE	42,660	38,770	35,110	31,700	28,560	25,610	22,820	20,240	17,660
	R*OS010L4A**	YF26KAE	59,060	53,530	48,400	43,570	39,090	34,830	30,870	27,240	23,620
	R*OS013L4A**	YF32KAE	71,610	65,200	59,150	53,520	48,190	43,260	38,520	34,150	29,780
	R*OS015L4A**	YF38KAE	85,090	77,610	70,480	63,500	57,140	51,220	45,670	40,660	35,660
95°	R*OS008L4A**	YF19KAE	40,800	37,070	33,570	30,330	27,320	24,520	21,880	19,430	16,990
	R*OS010L4A**	YF26KAE	56,450	51,180	46,290	41,670	37,390	33,320	29,520	26,030	22,540
	R*OS013L4A**	YF32KAE	68,450	62,360	56,590	51,220	46,130	41,400	36,860	32,660	28,450
	R*OS015L4A**	YF38KAE	81,250	74,120	67,310	60,650	54,580	48,920	43,600	38,800	33,990
100°	R*OS008L4A**	YF19KAE	38,900	35,360	32,010	28,920	26,090	23,420	20,930	18,640	16,340
	R*OS010L4A**	YF26KAE	53,780	48,770	44,130	39,730	35,660	31,760	28,120	24,770	21,420
	R*OS013L4A**	YF32KAE	65,230	59,460	53,960	48,850	44,010	39,500	35,150	31,110	27,060
	R*OS015L4A**	YF38KAE	77,320	70,540	64,060	57,730	51,940	46,550	41,470	36,880	32,290
110°	R*OS008L4A**	YF19KAE	35,040	31,870	28,880	26,110	23,590	21,230	19,060	17,050	15,040
	R*OS010L4A**	YF26KAE	48,280	43,810	39,640	35,700	32,010	28,520	25,220	22,160	19,100
	R*OS013L4A**	YF32KAE	58,620	53,450	48,530	43,930	39,560	35,490	31,550	27,840	24,140
	R*OS015L4A**	YF38KAE	69,240	63,170	57,340	51,650	46,430	41,600	36,990	32,820	28,650

* Each asterisk represents a variable character based upon model, voltage, and vintage ordered. See page 4 for nomenclature.

‡ Multiply capacity by .83 when used with 50 Hz power.

Liquid injection standard.

CAPACITY DATA (BTUH)

LOW TEMPERATURE // R407A SCROLL // 60 HZ‡

Ambient Temp. (°F)	Model No.	Comp. Model No.	Suction Temperature (°F)								
			0°	-5°	-10°	-15°	-20°	-25°	-30°	-35°	-40°
90°	R*OS008L4A**	YF19KAE	37,810	33,970	30,410	27,140	24,120	21,360	18,830	16,460	14,090
	R*OS010L4A**	YF26KAE	55,430	49,540	43,990	38,840	34,000	29,730	25,970	23,120	20,280
	R*OS013L4A**	YF32KAE	65,900	59,080	52,640	46,700	41,110	36,190	31,770	28,440	25,110
	R*OS015L4A**	YF38KAE	79,170	70,900	63,130	55,870	49,130	43,030	37,820	34,010	30,200
95°	R*OS008L4A**	YF19KAE	36,600	32,850	29,380	26,210	23,290	20,600	18,120	15,860	13,610
	R*OS010L4A**	YF26KAE	53,660	47,900	42,480	37,460	32,750	28,470	24,940	22,200	19,460
	R*OS013L4A**	YF32KAE	63,800	57,140	50,850	45,050	39,600	34,800	30,550	27,320	24,080
	R*OS015L4A**	YF38KAE	76,590	68,500	60,910	53,820	47,260	41,320	36,270	32,570	28,880
100°	R*OS008L4A**	YF19KAE	35,360	31,710	28,340	25,250	22,400	19,800	17,410	15,240	13,060
	R*OS010L4A**	YF26KAE	51,840	46,210	40,920	36,030	31,450	27,410	23,810	21,180	18,560
	R*OS013L4A**	YF32KAE	61,660	55,180	49,050	43,400	38,100	33,400	29,230	26,110	22,990
	R*OS015L4A**	YF38KAE	73,940	66,050	58,630	51,770	45,370	39,600	34,590	31,080	27,580
110°	R*OS008L4A**	YF19KAE	32,800	29,350	26,170	23,270	20,590	18,150	15,920	13,920	11,920
	R*OS010L4A**	YF26KAE	48,050	42,700	37,660	33,040	28,710	24,910	21,560	19,110	16,660
	R*OS013L4A**	YF32KAE	57,150	51,000	45,170	39,810	34,780	30,340	26,500	23,520	20,530
	R*OS015L4A**	YF38KAE	68,380	60,890	53,870	47,300	41,230	35,810	31,240	27,650	24,060

LOW TEMPERATURE // R407C SCROLL // 60 HZ‡

Ambient Temp. (°F)	Model No.	Comp. Model No.	Suction Temperature (°F)								
			0°	-5°	-10°	-15°	-20°	-25°	-30°	-35°	-40°
90°	R*OS008L4A**	YF19KAE	35,070	31,280	27,680	24,330	21,270	18,560	16,260	14,600	12,940
	R*OS010L4A**	YF26KAE	50,870	45,280	39,980	35,020	30,470	26,460	22,990	20,450	17,900
	R*OS013L4A**	YF32KAE	59,480	53,070	47,010	41,350	36,170	31,570	27,550	24,650	21,740
	R*OS015L4A**	YF38KAE	72,480	64,530	57,000	49,990	43,580	37,910	33,140	29,300	25,460
95°	R*OS008L4A**	YF19KAE	34,020	30,320	26,800	23,540	20,570	17,930	15,680	14,110	12,540
	R*OS010L4A**	YF26KAE	49,380	43,890	38,690	33,840	29,410	25,490	22,120	19,680	17,240
	R*OS013L4A**	YF32KAE	57,730	51,450	45,510	39,970	34,910	30,410	26,550	23,740	20,920
	R*OS015L4A**	YF38KAE	70,290	62,480	55,110	48,240	42,000	36,470	31,840	28,140	24,440
100°	R*OS008L4A**	YF19KAE	32,960	29,330	25,910	22,720	19,830	17,270	15,110	13,600	12,090
	R*OS010L4A**	YF26KAE	47,820	42,440	37,350	32,620	28,290	24,490	21,160	18,830	16,500
	R*OS013L4A**	YF32KAE	55,930	49,800	43,990	38,580	33,640	29,240	25,460	22,750	20,040
	R*OS015L4A**	YF38KAE	68,030	60,390	53,160	46,500	40,400	35,020	30,430	26,930	23,420
110°	R*OS008L4A**	YF19KAE	30,740	27,280	24,040	21,030	18,300	15,890	13,870	12,490	11,110
	R*OS010L4A**	YF26KAE	44,570	39,410	34,530	30,030	25,930	22,340	19,240	17,090	14,930
	R*OS013L4A**	YF32KAE	52,130	46,260	40,700	35,540	30,830	26,670	23,170	20,610	18,050
	R*OS015L4A**	YF38KAE	63,260	55,950	49,080	42,670	36,850	31,790	27,600	24,100	20,590

* Each asterisk represents a variable character based upon model, voltage, and vintage ordered. See page 4 for nomenclature.

‡ Multiply capacity by .83 when used with 50 Hz power.

Liquid injection standard.

CAPACITY DATA (BTUH)

LOW TEMPERATURE // R407F SCROLL // 60 HZ‡

Ambient Temp. (°F)	Model No.	Comp. Model No.	Suction Temperature (°F)								
			0°	-5°	-10°	-15°	-20°	-25°	-30°	-35°	-40°
90°	R*OS008L4A**	YF19KAE	37,630	33,530	29,690	26,130	22,900	20,040	17,600	15,780	13,950
	R*OS010L4A**	YF26KAE	54,090	48,100	42,480	37,260	32,500	28,310	24,650	21,880	19,110
	R*OS013L4A**	YF32KAE	64,420	57,420	50,880	44,820	39,300	34,400	30,090	26,870	23,640
	R*OS015L4A**	YF38KAE	77,420	68,860	60,850	53,440	46,710	40,750	35,700	31,510	27,310
95°	R*OS008L4A**	YF19KAE	36,420	32,430	28,680	25,230	22,110	19,330	16,940	15,210	13,470
	R*OS010L4A**	YF26KAE	52,370	46,510	41,020	35,940	31,310	27,220	23,670	21,010	18,340
	R*OS013L4A**	YF32KAE	62,370	55,540	49,150	43,240	37,860	33,080	28,940	25,810	22,670
	R*OS015L4A**	YF38KAE	74,900	66,530	58,710	51,480	44,930	39,130	34,230	30,180	26,120
100°	R*OS008L4A**	YF19KAE	35,190	31,300	27,670	24,310	21,270	18,580	16,280	14,610	12,930
	R*OS010L4A**	YF26KAE	50,590	44,870	39,520	34,570	30,070	26,100	22,600	20,050	17,490
	R*OS013L4A**	YF32KAE	60,270	53,630	47,410	41,650	36,420	31,750	27,690	24,670	21,640
	R*OS015L4A**	YF38KAE	72,310	64,150	56,510	49,520	43,140	37,500	32,650	28,800	24,940
110°	R*OS008L4A**	YF19KAE	32,640	28,970	25,550	22,400	19,550	17,030	14,880	13,340	11,800
	R*OS010L4A**	YF26KAE	46,890	41,460	36,370	31,700	27,450	23,720	20,460	18,080	15,700
	R*OS013L4A**	YF32KAE	55,870	49,570	43,660	38,210	33,250	28,840	25,100	22,220	19,330
	R*OS015L4A**	YF38KAE	66,870	59,130	51,930	45,250	39,200	33,910	29,490	25,630	21,760

LOW TEMPERATURE // R448A, R449A SCROLL // 60 HZ‡

Ambient Temp. (°F)	Model No.	Comp. Model No.	Suction Temperature (°F)								
			0°	-5°	-10°	-15°	-20°	-25°	-30°	-35°	-40°
90°	R*OS008L4A**	YF19KAE	38,790	34,870	31,280	27,950	24,850	21,950	19,330	16,850	14,360
	R*OS010L4A**	YF26KAE	53,950	48,330	43,220	38,410	33,880	29,760	25,840	22,450	19,050
	R*OS013L4A**	YF32KAE	65,880	59,310	53,240	47,440	42,150	37,200	32,510	28,370	24,230
	R*OS015L4A**	YF38KAE	79,080	71,110	63,650	56,700	50,140	44,170	38,680	33,910	29,140
95°	R*OS008L4A**	YF19KAE	37,380	33,590	30,110	26,930	23,980	21,230	18,730	16,430	14,130
	R*OS010L4A**	YF26KAE	52,180	46,710	41,750	37,080	32,710	28,720	24,940	21,690	18,440
	R*OS013L4A**	YF32KAE	63,710	57,320	51,420	45,820	40,700	35,900	31,430	27,440	23,440
	R*OS015L4A**	YF38KAE	76,430	68,650	61,410	54,680	48,330	42,580	37,290	32,700	28,110
100°	R*OS008L4A**	YF19KAE	35,940	32,270	28,970	25,910	23,110	20,520	18,210	16,070	13,940
	R*OS010L4A**	YF26KAE	50,310	45,000	40,200	35,710	31,500	27,680	24,010	20,920	17,830
	R*OS013L4A**	YF32KAE	61,440	55,280	49,590	44,180	39,270	34,640	30,320	26,510	22,700
	R*OS015L4A**	YF38KAE	73,620	66,100	59,090	52,650	46,540	41,020	35,850	31,540	27,220
110°	R*OS008L4A**	YF19KAE	32,950	29,620	26,640	23,940	21,510	19,290	17,340	15,580	13,830
	R*OS010L4A**	YF26KAE	46,330	41,420	36,990	32,890	29,070	25,630	22,350	19,590	16,840
	R*OS013L4A**	YF32KAE	56,590	50,910	45,660	40,730	36,240	32,070	28,270	24,800	21,330
	R*OS015L4A**	YF38KAE	67,670	60,710	54,290	48,340	42,760	37,800	33,320	29,150	24,990

* Each asterisk represents a variable character based upon model, voltage, and vintage ordered. See page 4 for nomenclature.

‡ Multiply capacity by .83 when used with 50 Hz power.

Liquid injection standard.

CAPACITY DATA (BTUH)

LOW TEMPERATURE // R454A BITZER // 60 HZ‡

Ambient Temp. (°F)	Model No.	Comp. Model No.	Suction Temperature (°F)								
			0°	-5°	-10°	-15°	-20°	-25°	-30°	-35°	-40°
90°	R*BS003L4A**	4FES-3	30,110	27,400	23,840	20,580	17,900	15,240	12,760	10,530	8,580
	R*BS004L4A**	4EES-4	36,970	33,750	29,380	25,450	22,080	18,830	15,830	13,040	10,600
	R*BS005L4A**	4DES-5	41,410	37,830	33,020	28,650	24,860	21,180	17,810	14,660	11,890
	R*BS006L4A**	4CES-6	51,500	47,380	41,700	36,320	31,990	27,490	23,340	19,540	16,090
	R*BS008L4A**	4TES-9	65,720	59,610	51,690	44,170	37,840	31,840	26,320	21,270	16,840
	R*BS009L4A**	4PES-12	73,210	66,250	57,200	48,610	41,390	34,570	28,300	22,600	17,530
	R*BS010L4A**	4NES-14	86,770	78,920	68,540	58,730	51,040	42,920	35,590	28,900	22,970
	R*BS012L4A**	4JE-15	100,160	91,260	80,300	69,450	60,580	51,330	42,850	34,930	27,700
	R*BS015L4A**	4HE-18	112,790	105,400	92,210	80,870	70,830	60,750	51,180	41,730	33,820
	R*BS022L4A**	4GE-23	132,480	123,230	108,520	94,200	82,980	71,270	60,540	49,850	40,500
95°	R*BS003L4A**	4FES-3	28,430	25,880	22,470	19,400	16,810	14,180	11,850	9,730	7,830
	R*BS004L4A**	4EES-4	35,040	31,860	27,690	23,890	20,720	17,550	14,640	12,000	9,660
	R*BS005L4A**	4DES-5	39,290	35,770	31,120	26,840	23,310	19,750	16,450	13,430	10,820
	R*BS006L4A**	4CES-6	48,950	45,000	39,380	34,250	29,960	25,700	21,770	18,090	14,790
	R*BS008L4A**	4TES-9	62,230	56,230	48,470	41,320	35,270	29,530	24,250	19,480	15,290
	R*BS009L4A**	4PES-12	69,020	62,200	53,550	45,290	38,360	31,890	25,910	20,520	15,780
	R*BS010L4A**	4NES-14	82,000	74,340	64,390	55,190	47,460	39,760	32,810	26,380	20,760
	R*BS012L4A**	4JE-15	94,830	86,630	75,510	65,320	56,740	47,820	39,630	32,010	25,050
	R*BS015L4A**	4HE-18	108,640	99,840	87,480	75,600	66,550	56,710	47,400	38,850	31,030
	R*BS022L4A**	4GE-23	124,560	117,040	102,450	88,770	77,990	66,820	56,240	46,380	37,220
100°	R*BS003L4A**	4FES-3	27,270	24,470	21,190	18,140	15,750	13,320	11,050	8,990	7,200
	R*BS004L4A**	4EES-4	33,500	30,040	26,090	22,410	19,540	16,430	13,670	11,090	8,820
	R*BS005L4A**	4DES-5	37,490	33,750	29,300	25,140	21,930	18,460	15,340	12,380	9,910
	R*BS006L4A**	4CES-6	46,840	42,390	37,210	32,220	28,320	24,170	20,390	16,830	13,650
	R*BS008L4A**	4TES-9	59,120	52,900	45,160	38,390	33,190	27,510	22,510	17,900	13,920
	R*BS009L4A**	4PES-12	65,500	58,020	49,850	41,910	35,980	29,420	23,790	18,610	14,140
	R*BS010L4A**	4NES-14	78,040	70,040	60,260	51,520	44,460	37,060	30,380	24,320	18,900
	R*BS012L4A**	4JE-15	90,560	81,580	70,910	61,110	53,260	44,680	36,930	29,390	22,820
	R*BS015L4A**	4HE-18	103,620	93,990	82,090	71,070	62,570	53,340	44,560	35,930	28,700
	R*BS022L4A**	4GE-23	121,470	110,470	96,570	83,510	73,680	63,000	52,800	43,210	34,880
110°	R*BS003L4A**	4FES-3	24,420	22,020	18,900	16,050	13,630	11,510	9,330	7,520	5,900
	R*BS004L4A**	4EES-4	29,960	27,000	23,280	19,830	16,890	14,190	11,490	9,250	7,200
	R*BS005L4A**	4DES-5	33,580	30,280	26,090	22,210	18,950	15,910	12,860	10,330	8,020
	R*BS006L4A**	4CES-6	42,150	38,400	33,310	28,680	24,810	21,120	17,420	14,290	11,420
	R*BS008L4A**	4TES-9	52,780	47,140	40,100	33,660	28,270	23,450	18,600	14,660	11,000
	R*BS009L4A**	4PES-12	57,810	51,390	43,520	36,200	30,070	24,640	19,250	14,780	10,710
	R*BS010L4A**	4NES-14	69,160	62,070	53,070	44,540	37,790	31,490	25,100	19,810	15,090
	R*BS012L4A**	4JE-15	80,920	73,210	63,200	53,750	46,030	38,360	30,690	24,300	18,280
	R*BS015L4A**	4HE-18	92,040	84,640	73,320	63,240	54,280	46,190	37,770	30,220	23,350
	R*BS022L4A**	4GE-23	109,000	99,960	86,270	74,120	64,320	54,970	45,430	37,250	29,620

Additional Compressor Cooling Required†

* Each asterisk represents a variable character based upon model, voltage, and vintage ordered. See page 4 for nomenclature.

‡ Multiply capacity by .83 when used with 50 Hz power.

Liquid injection standard.

CAPACITY DATA (BTUH)

LOW TEMPERATURE // R454C BITZER // 60 HZ‡

Ambient Temp. (°F)	Model No.	Comp. Model No.	Suction Temperature (°F)								
			0°	-5°	-10°	-15°	-20°	-25°	-30°	-35°	-40°
90°	R*BS003L4A**	4FES-3	23,300	20,640	17,800	15,220	13,020	10,940	9,120	7,430	6,000
	R*BS004L4A**	4EES-4	28,610	25,420	21,930	18,830	16,060	13,510	11,310	9,200	7,400
	R*BS005L4A**	4DES-5	32,040	28,490	24,650	21,190	18,080	15,200	12,720	10,350	8,310
	R*BS006L4A**	4CES-6	39,850	35,690	31,120	26,860	23,270	19,730	16,680	13,790	11,240
	R*BS008L4A**	4TES-9	50,860	44,900	38,580	32,670	27,530	22,860	18,800	15,010	11,760
	R*BS009L4A**	4PES-12	56,650	49,900	42,700	35,960	30,110	24,810	20,220	15,950	12,240
	R*BS010L4A**	4NES-14	67,140	59,440	51,160	43,440	37,130	30,810	25,420	20,400	16,040
	R*BS012L4A**	4JE-15	77,500	68,740	59,930	51,370	44,070	36,840	30,610	24,660	19,350
	R*BS015L4A**	4HE-18	87,280	79,390	68,830	59,820	51,530	43,600	36,560	29,450	23,620
	R*BS022L4A**	4GE-23	102,510	92,820	80,990	69,670	60,370	51,160	43,240	35,190	28,290
95°	R*BS003L4A**	4FES-3	22,000	19,490	16,770	14,350	12,230	10,180	8,470	6,870	5,470
	R*BS004L4A**	4EES-4	27,110	24,000	20,670	17,670	15,080	12,590	10,450	8,470	6,750
	R*BS005L4A**	4DES-5	30,400	26,950	23,220	19,850	16,960	14,180	11,750	9,480	7,550
	R*BS006L4A**	4CES-6	37,880	33,900	29,390	25,330	21,800	18,450	15,550	12,770	10,330
	R*BS008L4A**	4TES-9	48,150	42,360	36,180	30,560	25,660	21,200	17,320	13,750	10,680
	R*BS009L4A**	4PES-12	53,400	46,850	39,970	33,500	27,910	22,890	18,510	14,480	11,020
	R*BS010L4A**	4NES-14	63,450	56,000	48,060	40,820	34,530	28,540	23,440	18,620	14,500
	R*BS012L4A**	4JE-15	73,380	65,250	56,360	48,310	41,280	34,330	28,310	22,590	17,490
	R*BS015L4A**	4HE-18	84,060	75,210	65,300	55,920	48,420	40,700	33,860	27,420	21,670
	R*BS022L4A**	4GE-23	96,390	88,160	76,470	65,660	56,740	47,960	40,180	32,730	26,000
100°	R*BS003L4A**	4FES-3	21,110	18,430	15,820	13,420	11,460	9,560	7,890	6,340	5,030
	R*BS004L4A**	4EES-4	25,920	22,630	19,470	16,580	14,210	11,790	9,770	7,830	6,160
	R*BS005L4A**	4DES-5	29,010	25,420	21,870	18,590	15,950	13,250	10,950	8,740	6,920
	R*BS006L4A**	4CES-6	36,250	31,930	27,770	23,830	20,610	17,340	14,560	11,880	9,540
	R*BS008L4A**	4TES-9	45,750	39,850	33,710	28,400	24,150	19,740	16,080	12,630	9,720
	R*BS009L4A**	4PES-12	50,680	43,700	37,210	30,990	26,180	21,110	16,990	13,130	9,880
	R*BS010L4A**	4NES-14	60,390	52,760	44,980	38,110	32,350	26,600	21,700	17,170	13,200
	R*BS012L4A**	4JE-15	70,080	61,450	52,930	45,200	38,750	32,070	26,380	20,740	15,940
	R*BS015L4A**	4HE-18	80,180	70,800	61,270	52,570	45,520	38,290	31,830	25,360	20,040
	R*BS022L4A**	4GE-23	94,000	83,210	72,080	61,770	53,600	45,220	37,710	30,500	24,370
110°	R*BS003L4A**	4FES-3	18,900	16,590	14,100	11,870	9,920	8,260	6,670	5,310	-
	R*BS004L4A**	4EES-4	23,180	20,340	17,380	14,670	12,280	10,190	8,210	6,530	-
	R*BS005L4A**	4DES-5	25,980	22,810	19,470	16,430	13,790	11,420	9,190	7,290	-
	R*BS006L4A**	4CES-6	32,620	28,920	24,860	21,210	18,050	15,160	12,440	10,090	-
	R*BS008L4A**	4TES-9	40,840	35,510	29,930	24,890	20,570	16,830	13,290	10,350	-
	R*BS009L4A**	4PES-12	44,730	38,710	32,490	26,770	21,880	17,690	13,750	10,430	-
	R*BS010L4A**	4NES-14	53,520	46,750	39,610	32,940	27,490	22,610	17,930	13,990	-
	R*BS012L4A**	4JE-15	62,610	55,140	47,170	39,750	33,480	27,530	21,920	17,150	-
	R*BS015L4A**	4HE-18	71,220	63,750	54,720	46,770	39,490	33,150	26,980	21,330	-
	R*BS022L4A**	4GE-23	84,340	75,300	64,390	54,820	46,790	39,460	32,450	26,300	-

Additional Compressor Cooling Required†

* Each asterisk represents a variable character based upon model, voltage, and vintage ordered. See page 4 for nomenclature.

‡ Multiply capacity by .83 when used with 50 Hz power.

Liquid injection standard.

CAPACITY DATA (BTUH)

LOW TEMPERATURE // R455A BITZER // 60 HZ‡

Ambient Temp. (°F)	Model No.	Comp. Model No.	Suction Temperature (°F)								
			0°	-5°	-10°	-15°	-20°	-25°	-30°	-35°	-40°
90°	R*BS003L4A**	4FES-3	23,900	21,140	18,190	15,550	13,230	11,030	9,180	7,450	5,960
	R*BS004L4A**	4EES-4	29,540	26,130	22,470	19,210	16,390	13,670	11,350	9,200	7,340
	R*BS005L4A**	4DES-5	33,190	29,420	25,320	21,610	18,460	15,390	12,750	10,320	8,210
	R*BS006L4A**	4CES-6	41,490	37,020	32,140	27,750	23,800	20,150	16,970	13,910	11,310
	R*BS008L4A**	4TES-9	52,500	46,130	39,240	33,230	27,910	23,100	18,900	14,950	11,740
	R*BS009L4A**	4PES-12	58,230	50,890	43,360	36,500	30,370	24,910	20,120	15,830	12,080
	R*BS010L4A**	4NES-14	69,440	61,220	52,410	44,480	37,640	31,100	25,540	20,400	15,920
	R*BS012L4A**	4JE-15	78,860	71,540	61,760	52,870	45,070	37,540	30,900	24,760	19,380
	R*BS015L4A**	4HE-18	92,220	82,430	71,730	62,110	53,080	44,520	37,220	30,020	23,980
	R*BS022L4A**	4GE-23	106,570	96,320	83,770	72,760	62,200	52,690	44,260	36,150	29,200
95°	R*BS003L4A**	4FES-3	22,710	20,070	17,170	14,610	12,360	10,270	8,490	6,860	5,430
	R*BS004L4A**	4EES-4	27,980	24,650	21,150	18,040	15,320	12,690	10,510	8,450	6,680
	R*BS005L4A**	4DES-5	31,520	27,790	23,890	20,310	17,250	14,320	11,820	9,470	7,480
	R*BS006L4A**	4CES-6	39,380	35,060	30,420	26,100	22,410	18,810	15,770	12,860	10,370
	R*BS008L4A**	4TES-9	49,560	43,100	36,770	30,910	26,040	21,280	17,320	13,730	10,610
	R*BS009L4A**	4PES-12	54,880	47,940	40,420	33,900	28,110	22,800	18,250	14,120	10,700
	R*BS010L4A**	4NES-14	65,590	57,440	49,090	41,530	34,920	28,700	23,430	18,520	14,380
	R*BS012L4A**	4JE-15	76,190	67,650	58,170	49,600	42,100	34,750	28,560	22,660	17,510
	R*BS015L4A**	4HE-18	87,330	78,260	67,600	57,880	49,650	41,520	34,570	27,980	21,820
	R*BS022L4A**	4GE-23	101,930	91,380	78,980	67,580	58,280	49,220	41,250	33,400	26,710
100°	R*BS003L4A**	4FES-3	21,750	18,920	16,120	13,650	11,630	9,600	7,890	6,320	4,960
	R*BS004L4A**	4EES-4	26,630	23,280	19,910	16,900	14,310	11,870	9,730	7,770	6,080
	R*BS005L4A**	4DES-5	29,990	26,200	22,390	19,010	16,150	13,340	10,930	8,700	6,800
	R*BS006L4A**	4CES-6	37,650	33,130	28,590	24,510	21,110	17,680	14,740	11,920	9,540
	R*BS008L4A**	4TES-9	47,040	40,610	34,450	28,770	24,160	19,760	15,920	12,480	9,470
	R*BS009L4A**	4PES-12	51,880	44,540	37,580	31,190	25,890	20,940	16,620	12,720	9,390
	R*BS010L4A**	4NES-14	61,900	53,250	45,830	38,530	32,440	26,540	21,450	16,790	12,860
	R*BS012L4A**	4JE-15	72,610	63,420	54,440	46,140	39,270	32,300	26,290	20,590	15,710
	R*BS015L4A**	4HE-18	83,280	73,360	63,710	54,160	46,350	38,820	31,930	25,500	19,880
	R*BS022L4A**	4GE-23	97,010	85,550	74,280	63,270	54,870	46,180	38,540	31,020	24,650
110°	R*BS003L4A**	4FES-3	19,440	16,930	14,340	12,050	10,030	8,280	-	-	-
	R*BS004L4A**	4EES-4	23,870	20,820	17,710	14,850	12,380	10,210	-	-	-
	R*BS005L4A**	4DES-5	26,770	23,340	19,900	16,660	13,930	11,440	-	-	-
	R*BS006L4A**	4CES-6	33,770	29,880	25,670	21,820	18,480	15,400	-	-	-
	R*BS008L4A**	4TES-9	41,620	36,030	30,130	24,920	20,420	16,540	-	-	-
	R*BS009L4A**	4PES-12	45,210	38,980	32,430	26,550	21,420	17,130	-	-	-
	R*BS010L4A**	4NES-14	54,580	47,400	39,870	33,100	27,110	22,080	-	-	-
	R*BS012L4A**	4JE-15	64,500	56,620	48,180	40,240	33,430	27,300	-	-	-
	R*BS015L4A**	4HE-18	74,140	65,490	56,140	46,830	39,940	33,090	-	-	-
	R*BS022L4A**	4GE-23	85,410	76,910	66,120	55,700	47,400	39,920	-	-	-

Additional Compressor Cooling Required†

* Each asterisk represents a variable character based upon model, voltage, and vintage ordered. See page 4 for nomenclature.

‡ Multiply capacity by .83 when used with 50 Hz power.

Liquid injection standard.

CAPACITY DATA (BTUH)

LOW TEMPERATURE // R404A BITZER // 60 HZ‡

Ambient Temp. (°F)	Model No.	Comp. Model No.	Suction Temperature (°F)								
			0°	-5°	-10°	-15°	-20°	-25°	-30°	-35°	-40°
90°	R*BS003L4A**	4FES-3	30,350	27,120	24,110	21,420	18,970	16,760	14,730	13,060	11,390
	R*BS004L4A**	4EES-4	36,980	33,090	29,470	26,120	23,050	20,210	17,660	15,450	13,230
	R*BS005L4A**	4DES-5	42,980	38,510	34,330	30,480	26,910	23,650	20,650	18,060	15,460
	R*BS006L4A**	4CES-6	49,940	44,810	40,090	35,510	31,410	27,580	24,030	20,970	17,900
	R*BS008L4A**	4TES-9	67,120	59,630	52,630	46,380	40,470	35,070	30,230	26,060	21,880
	R*BS009L4A**	4PES-12	74,400	65,860	57,980	50,750	44,110	38,090	32,560	27,770	22,990
	R*BS010L4A**	4NES-14	86,620	77,370	68,700	60,460	52,950	46,040	39,670	34,200	28,730
	R*BS012L4A**	4JE-15	100,000	89,780	80,430	71,340	63,050	55,230	48,210	42,190	36,170
	R*BS015L4A**	4HE-18	113,910	102,780	92,400	82,430	73,360	64,440	56,440	49,130	41,830
	R*BS022L4A**	4GE-23	134,450	121,030	108,780	97,050	86,120	75,910	66,610	58,490	50,380
95°	R*BS003L4A**	4FES-3	28,620	25,580	22,730	20,160	17,870	15,750	13,830	12,220	10,620
	R*BS004L4A**	4EES-4	34,930	31,210	27,750	24,570	21,650	18,950	16,520	14,420	12,310
	R*BS005L4A**	4DES-5	40,600	36,330	32,340	28,670	25,250	22,160	19,300	16,840	14,380
	R*BS006L4A**	4CES-6	47,160	42,230	37,700	33,340	29,410	25,760	22,390	19,490	16,590
	R*BS008L4A**	4TES-9	63,290	56,130	49,410	43,440	37,810	32,660	28,060	24,100	20,130
	R*BS009L4A**	4PES-12	69,950	61,760	54,230	47,330	41,000	35,270	30,010	25,480	20,960
	R*BS010L4A**	4NES-14	81,580	72,720	64,440	56,570	49,410	42,820	36,770	31,590	26,400
	R*BS012L4A**	4JE-15	94,430	84,630	75,660	67,000	59,020	51,530	44,840	39,090	33,340
	R*BS015L4A**	4HE-18	107,600	97,010	87,070	77,530	68,850	60,330	52,700	45,750	38,810
	R*BS022L4A**	4GE-23	127,250	114,470	102,730	91,510	81,060	71,310	62,450	54,740	47,030
100°	R*BS003L4A**	4FES-3	26,920	24,110	21,360	18,950	16,740	14,730	12,910	11,380	9,850
	R*BS004L4A**	4EES-4	32,880	29,340	26,050	23,020	20,240	17,670	15,380	13,390	11,390
	R*BS005L4A**	4DES-5	38,230	34,140	30,350	26,850	23,620	20,680	17,970	15,640	13,310
	R*BS006L4A**	4CES-6	44,390	39,680	35,340	31,180	27,450	23,980	20,770	18,030	15,280
	R*BS008L4A**	4TES-9	59,500	52,630	46,250	40,530	35,150	30,270	25,920	22,170	18,420
	R*BS009L4A**	4PES-12	65,520	57,710	50,520	43,960	37,920	32,480	27,510	23,250	18,980
	R*BS010L4A**	4NES-14	76,550	68,130	60,200	52,690	45,890	39,630	33,890	29,000	24,100
	R*BS012L4A**	4JE-15	88,940	79,500	70,930	62,640	55,050	47,880	41,500	36,030	30,560
	R*BS015L4A**	4HE-18	101,380	91,260	81,770	72,660	64,370	56,260	49,000	42,410	35,830
	R*BS022L4A**	4GE-23	120,140	107,910	96,700	86,000	76,020	66,760	58,330	51,010	43,700
110°	R*BS003L4A**	4FES-3	23,790	21,070	18,610	16,450	14,480	12,700	11,070	9,680	8,300
	R*BS004L4A**	4EES-4	28,770	25,580	22,620	19,920	17,440	15,150	13,100	11,330	9,560
	R*BS005L4A**	4DES-5	33,500	29,800	26,390	23,260	20,350	17,740	15,320	13,260	11,200
	R*BS006L4A**	4CES-6	38,910	34,620	30,710	26,970	23,590	20,480	17,640	15,200	12,770
	R*BS008L4A**	4TES-9	52,050	45,780	39,990	34,830	30,000	25,630	21,750	18,430	15,110
	R*BS009L4A**	4PES-12	56,830	49,730	43,260	37,330	31,950	27,070	22,680	18,920	15,170
	R*BS010L4A**	4NES-14	66,580	58,980	51,810	45,060	38,960	33,380	28,290	23,960	19,640
	R*BS012L4A**	4JE-15	77,940	69,430	61,660	54,110	47,190	40,750	35,010	30,090	25,180
	R*BS015L4A**	4HE-18	89,000	79,860	71,260	63,050	55,540	48,270	41,760	35,910	30,050
	R*BS022L4A**	4GE-23	105,970	94,900	84,740	75,060	66,070	57,750	50,210	43,710	37,210

* Each asterisk represents a variable character based upon model, voltage, and vintage ordered. See page 4 for nomenclature.

‡ Multiply capacity by .83 when used with 50 Hz power.

Liquid injection standard.

CAPACITY DATA (BTUH)

LOW TEMPERATURE // R407A BITZER // 60 HZ‡

Ambient Temp. (°F)	Model No.	Comp. Model No.	Suction Temperature (°F)								
			0°	-5°	-10°	-15°	-20°	-25°	-30°	-35°	-40°
90°	R*BS003L4A**	4FES-3	27,710	24,500	21,590	19,010	16,590	14,400	12,530	11,080	9,630
	R*BS004L4A**	4EES-4	32,040	28,230	24,760	21,560	18,750	16,080	13,790	11,730	9,670
	R*BS005L4A**	4DES-5	36,730	32,350	28,350	24,790	21,400	18,410	15,720	13,460	11,200
	R*BS006L4A**	4CES-6	44,740	39,590	34,790	30,360	26,340	22,770	19,470	16,820	14,170
	R*BS008L4A**	4TES-9	58,930	51,780	45,190	38,980	33,380	28,270	23,690	19,740	15,790
	R*BS009L4A**	4PES-12	65,230	56,850	49,220	42,120	35,930	30,180	24,980	20,370	15,760
	R*BS010L4A**	4NES-14	78,350	68,700	59,900	51,690	44,150	37,550	31,470	25,980	20,480
	R*BS012L4A**	4JE-15	87,640	77,890	68,690	59,780	51,430	43,630	36,250	29,780	23,320
	R*BS015L4A**	4HE-18	98,110	87,630	78,420	69,190	60,020	52,160	44,160	37,310	30,460
	R*BS022L4A**	4GE-23	125,340	110,010	96,160	83,750	73,120	62,640	54,070	47,530	41,000
95°	R*BS003L4A**	4FES-3	26,420	23,220	20,490	17,990	15,560	13,460	11,660	10,240	8,830
	R*BS004L4A**	4EES-4	30,380	26,710	23,330	20,290	17,540	15,030	12,790	10,860	8,930
	R*BS005L4A**	4DES-5	34,800	30,590	26,720	23,230	20,040	17,130	14,570	12,410	10,240
	R*BS006L4A**	4CES-6	42,500	37,530	32,900	28,630	24,740	21,360	18,160	15,620	13,070
	R*BS008L4A**	4TES-9	55,870	48,960	42,630	36,620	31,240	26,350	21,940	18,140	14,350
	R*BS009L4A**	4PES-12	61,630	53,530	46,180	39,340	33,390	27,890	22,920	18,470	14,030
	R*BS010L4A**	4NES-14	74,260	64,890	56,420	48,510	41,260	34,930	29,100	23,880	18,650
	R*BS012L4A**	4JE-15	83,720	74,220	65,290	56,650	48,520	40,920	33,690	27,310	20,930
	R*BS015L4A**	4HE-18	93,470	83,860	74,940	66,010	57,160	49,490	41,740	35,060	28,370
	R*BS022L4A**	4GE-23	118,970	105,230	91,770	79,710	69,480	59,440	51,250	45,120	38,990
100°	R*BS003L4A**	4FES-3	25,050	22,030	19,310	16,800	14,560	12,530	10,790	–	–
	R*BS004L4A**	4EES-4	28,750	25,180	21,940	19,020	16,370	13,920	11,820	–	–
	R*BS005L4A**	4DES-5	32,860	28,860	25,110	21,750	18,690	15,880	13,430	–	–
	R*BS006L4A**	4CES-6	40,280	35,480	31,020	26,910	23,180	19,940	16,860	–	–
	R*BS008L4A**	4TES-9	52,790	46,150	40,060	34,300	29,120	24,440	20,260	16,580	12,910
	R*BS009L4A**	4PES-12	58,030	50,230	43,150	36,600	30,900	25,640	20,900	16,620	12,340
	R*BS010L4A**	4NES-14	70,130	61,110	52,960	45,350	38,400	32,340	26,780	21,790	16,790
	R*BS012L4A**	4JE-15	79,670	70,480	61,820	53,420	45,510	38,050	31,170	24,870	18,560
	R*BS015L4A**	4HE-18	89,360	80,050	71,400	62,790	54,210	46,780	39,240	32,710	26,180
	R*BS022L4A**	4GE-23	113,570	100,280	87,250	75,610	65,730	56,120	48,340	42,600	36,850
110°	R*BS003L4A**	4FES-3	22,410	19,500	16,980	14,650	12,580	10,720	–	–	–
	R*BS004L4A**	4EES-4	25,500	22,230	19,210	16,470	14,080	11,860	–	–	–
	R*BS005L4A**	4DES-5	29,180	25,410	21,930	18,840	15,990	13,490	–	–	–
	R*BS006L4A**	4CES-6	35,880	31,500	27,340	23,540	20,110	17,080	–	–	–
	R*BS008L4A**	4TES-9	46,770	40,640	35,000	29,720	25,060	20,730	16,890	13,550	10,210
	R*BS009L4A**	4PES-12	50,930	43,730	37,220	31,220	26,020	21,230	16,840	12,980	9,110
	R*BS010L4A**	4NES-14	61,990	53,650	46,140	39,150	32,800	27,260	22,230	17,650	13,070
	R*BS012L4A**	4JE-15	71,380	62,760	54,600	46,660	39,180	32,300	25,570	19,510	13,440
	R*BS015L4A**	4HE-18	80,990	72,350	64,290	56,220	48,200	41,200	34,060	27,830	21,610
	R*BS022L4A**	4GE-23	102,680	90,230	78,030	67,180	57,980	49,190	42,200	37,170	32,150

* Each asterisk represents a variable character based upon model, voltage, and vintage ordered. See page 4 for nomenclature.

‡ Multiply capacity by .83 when used with 50 Hz power.

Liquid injection standard.

CAPACITY DATA (BTUH)

LOW TEMPERATURE // R407F BITZER // 60 HZ‡

Ambient Temp. (°F)	Model No.	Comp. Model No.	Suction Temperature (°F)								
			0°	-5°	-10°	-15°	-20°	-25°	-30°	-35°	-40°
90°	R*BS003L4A**	4FES-3	24,890	21,620	18,640	16,000	13,540	11,340	9,420	7,750	6,070
	R*BS004L4A**	4EES-4	32,280	28,020	24,180	20,700	17,590	14,740	12,250	10,000	7,740
	R*BS005L4A**	4DES-5	37,200	32,310	27,880	23,920	20,270	17,030	14,120	11,640	9,160
	R*BS006L4A**	4CES-6	45,220	39,520	34,310	29,580	25,300	21,410	17,940	14,970	12,000
	R*BS008L4A**	4TES-9	58,740	50,950	43,850	37,340	31,440	26,190	21,330	17,100	12,870
	R*BS009L4A**	4PES-12	64,980	56,170	48,120	40,710	34,080	28,000	22,480	17,680	12,880
	R*BS010L4A**	4NES-14	76,880	66,860	57,640	49,230	41,480	34,550	28,200	22,360	16,510
	R*BS012L4A**	4JE-15	89,420	79,400	69,970	61,100	52,770	45,090	38,060	31,870	25,670
	R*BS015L4A**	4HE-18	102,860	92,270	82,270	72,840	63,990	55,760	48,200	41,780	35,350
	R*BS022L4A**	4GE-23	132,580	116,660	102,050	88,860	77,100	66,790	58,030	51,780	45,530
95°	R*BS003L4A**	4FES-3	23,740	20,500	17,690	15,130	12,690	10,580	8,740	7,140	5,540
	R*BS004L4A**	4EES-4	30,680	26,580	22,850	19,530	16,490	13,810	11,380	9,270	7,160
	R*BS005L4A**	4DES-5	35,340	30,620	26,340	22,480	19,030	15,890	13,120	10,770	8,410
	R*BS006L4A**	4CES-6	43,070	37,550	32,510	27,960	23,810	20,130	16,770	13,940	11,100
	R*BS008L4A**	4TES-9	55,750	48,220	41,370	35,060	29,370	24,310	19,580	15,470	11,360
	R*BS009L4A**	4PES-12	61,470	52,940	45,170	38,020	31,610	25,760	20,440	16,270	12,090
	R*BS010L4A**	4NES-14	72,960	63,230	54,340	46,190	38,710	32,020	25,870	20,240	14,610
	R*BS012L4A**	4JE-15	85,780	76,000	66,820	58,180	50,020	42,480	35,510	29,300	23,080
	R*BS015L4A**	4HE-18	98,380	88,670	78,960	69,800	61,210	53,120	45,700	39,310	32,920
	R*BS022L4A**	4GE-23	126,160	111,880	97,620	84,760	73,380	63,420	54,950	48,950	42,950
100°	R*BS003L4A**	4FES-3	22,540	19,450	16,670	14,130	11,860	9,830	8,070	6,550	5,020
	R*BS004L4A**	4EES-4	29,110	25,120	21,550	18,350	15,440	12,820	10,550	8,570	6,580
	R*BS005L4A**	4DES-5	33,460	28,980	24,820	21,100	17,800	14,760	12,130	9,900	7,670
	R*BS006L4A**	4CES-6	40,930	35,590	30,740	26,340	22,370	18,830	15,610	12,920	10,230
	R*BS008L4A**	4TES-9	52,730	45,480	38,890	32,810	27,300	22,410	17,880	13,860	9,840
	R*BS009L4A**	4PES-12	57,950	49,730	42,220	35,340	29,180	23,540	18,410	14,320	10,230
	R*BS010L4A**	4NES-14	68,990	59,620	51,030	43,170	35,940	29,480	23,550	18,110	12,670
	R*BS012L4A**	4JE-15	81,960	72,490	63,570	55,140	47,150	39,690	32,990	26,740	20,480
	R*BS015L4A**	4HE-18	94,420	84,990	75,570	66,700	58,300	50,420	43,100	36,740	30,370
	R*BS022L4A**	4GE-23	120,700	106,860	93,020	80,550	69,510	59,900	51,750	45,990	40,220
110°	R*BS003L4A**	4FES-3	20,180	17,240	14,650	12,300	10,220	8,380	6,770	–	–
	R*BS004L4A**	4EES-4	25,970	22,300	18,970	15,980	13,350	10,990	8,900	–	–
	R*BS005L4A**	4DES-5	29,890	25,660	21,810	18,380	15,310	12,610	10,190	–	–
	R*BS006L4A**	4CES-6	36,660	31,770	27,240	23,170	19,500	16,210	13,330	–	–
	R*BS008L4A**	4TES-9	46,810	40,100	33,960	28,320	23,280	18,670	14,420	10,650	6,880
	R*BS009L4A**	4PES-12	50,980	43,370	36,420	30,050	24,350	19,120	14,290	10,680	7,060
	R*BS010L4A**	4NES-14	61,150	52,440	44,470	37,160	30,460	24,440	18,920	13,810	8,690
	R*BS012L4A**	4JE-15	74,010	65,120	56,680	48,640	41,000	34,010	27,280	21,060	14,840
	R*BS015L4A**	4HE-18	86,180	77,420	68,630	60,250	52,290	44,760	37,650	31,320	24,990
	R*BS022L4A**	4GE-23	109,480	96,490	83,460	71,770	61,390	52,440	44,940	39,590	34,240

* Each asterisk represents a variable character based upon model, voltage, and vintage ordered. See page 4 for nomenclature.

‡ Multiply capacity by .83 when used with 50 Hz power.

Liquid injection standard.

CAPACITY DATA (BTUH)

LOW TEMPERATURE // R448A, 449A BITZER // 60 HZ‡

Ambient Temp. (°F)	Model No.	Comp. Model No.	Suction Temperature (°F)								
			0°	-5°	-10°	-15°	-20°	-25°	-30°	-35°	-40°
90°	R*BS003L4A**	4FES-3	28,180	24,950	21,990	19,400	16,960	14,730	12,870	–	–
	R*BS004L4A**	4EES-4	33,210	29,270	25,890	22,660	19,850	17,080	14,810	–	–
	R*BS005L4A**	4DES-5	38,090	33,710	29,660	26,090	22,630	19,520	16,820	–	–
	R*BS006L4A**	4CES-6	46,340	41,120	36,240	31,780	27,810	24,140	20,890	–	–
	R*BS008L4A**	4TES-9	60,550	53,310	46,550	40,330	34,650	29,600	25,050	–	–
	R*BS009L4A**	4PES-12	67,080	58,370	50,830	43,840	37,670	31,830	26,770	–	–
	R*BS010L4A**	4NES-14	81,200	71,480	62,490	54,280	46,810	40,050	34,070	–	–
	R*BS012L4A**	4JE-15	94,640	85,100	75,910	67,220	58,980	51,310	44,180	–	–
	R*BS015L4A**	4HE-18	104,760	94,910	85,200	76,240	67,710	59,650	52,220	–	–
	R*BS022L4A**	4GE-23	132,110	117,570	103,600	91,030	79,870	69,420	61,070	–	–
95°	R*BS003L4A**	4FES-3	26,850	23,620	20,850	18,330	15,880	13,740	11,940	–	–
	R*BS004L4A**	4EES-4	31,520	27,740	24,430	21,370	18,600	15,990	13,770	–	–
	R*BS005L4A**	4DES-5	36,140	31,910	28,000	24,490	21,240	18,210	15,630	–	–
	R*BS006L4A**	4CES-6	44,060	39,010	34,300	30,000	26,150	22,670	19,510	–	–
	R*BS008L4A**	4TES-9	57,420	50,420	43,930	37,920	32,470	27,630	23,240	–	–
	R*BS009L4A**	4PES-12	63,380	54,970	47,710	40,970	35,050	29,460	24,620	–	–
	R*BS010L4A**	4NES-14	77,020	67,580	58,930	51,010	43,810	37,320	31,560	–	–
	R*BS012L4A**	4JE-15	90,860	81,520	72,580	64,120	56,040	48,510	41,440	–	–
	R*BS015L4A**	4HE-18	100,210	91,240	81,830	73,150	64,900	57,000	49,750	–	–
	R*BS022L4A**	4GE-23	125,700	112,780	99,200	86,980	76,240	66,200	58,220	–	–
100°	R*BS003L4A**	4FES-3	24,930	21,920	19,180	16,690	14,460	12,410	10,720	–	–
	R*BS004L4A**	4EES-4	28,590	24,960	21,820	18,910	16,280	13,770	11,730	–	–
	R*BS005L4A**	4DES-5	32,680	28,720	24,960	21,630	18,550	15,680	13,250	–	–
	R*BS006L4A**	4CES-6	40,100	35,270	30,800	26,700	23,070	19,790	16,810	–	–
	R*BS008L4A**	4TES-9	52,610	45,980	39,790	34,070	28,840	24,210	20,030	–	–
	R*BS009L4A**	4PES-12	57,780	49,790	42,850	36,420	30,740	25,370	20,680	–	–
	R*BS010L4A**	4NES-14	69,790	60,840	52,610	45,050	38,170	31,960	26,430	–	–
	R*BS012L4A**	4JE-15	79,180	70,110	61,390	53,110	45,180	37,700	30,820	–	–
	R*BS015L4A**	4HE-18	88,700	79,810	70,570	62,010	53,780	45,900	38,490	–	–
	R*BS022L4A**	4GE-23	112,890	100,280	87,120	75,280	64,800	55,040	47,050	–	–
110°	R*BS003L4A**	4FES-3	22,700	19,770	17,200	14,860	12,770	10,870	9,270	–	–
	R*BS004L4A**	4EES-4	26,550	23,180	20,210	17,430	15,020	12,720	10,780	–	–
	R*BS005L4A**	4DES-5	30,420	26,620	23,090	19,980	17,060	14,450	12,160	–	–
	R*BS006L4A**	4CES-6	37,290	32,850	28,600	24,750	21,340	18,230	15,500	–	–
	R*BS008L4A**	4TES-9	48,080	41,890	36,110	30,820	26,080	21,760	17,900	–	–
	R*BS009L4A**	4PES-12	52,290	44,860	38,440	32,530	27,360	22,500	18,220	–	–
	R*BS010L4A**	4NES-14	64,170	55,770	48,120	41,110	34,790	29,090	24,090	–	–
	R*BS012L4A**	4JE-15	78,550	70,010	61,730	53,790	46,180	39,160	32,270	–	–
	R*BS015L4A**	4HE-18	87,690	79,630	71,150	63,250	55,680	48,400	41,550	–	–
	R*BS022L4A**	4GE-23	108,900	97,240	84,940	73,960	64,290	55,490	48,650	–	–

* Each asterisk represents a variable character based upon model, voltage, and vintage ordered. See page 4 for nomenclature.

‡ Multiply capacity by .83 when used with 50 Hz power.

Liquid injection standard.

ADDITIONAL COMPRESSOR COOLING GRAPH

MEDIUM TEMPERATURE DISCUS

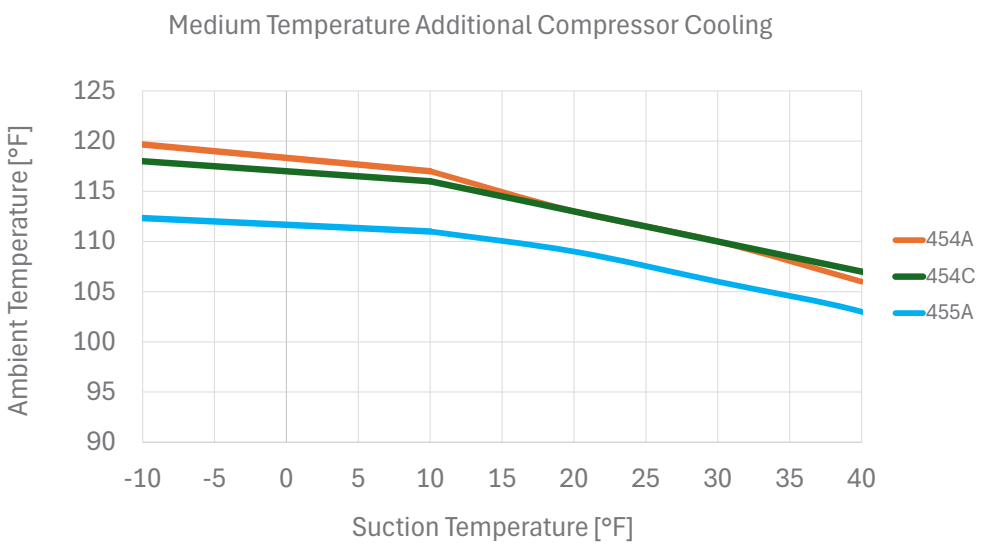

Additional compressor cooling is recommended for ambients above the lines shown.

- Additional compressor cooling option includes liquid injection (TREV), suction accumulator, and insulated suction line components and piping.

MEDIUM TEMPERATURE SCROLL

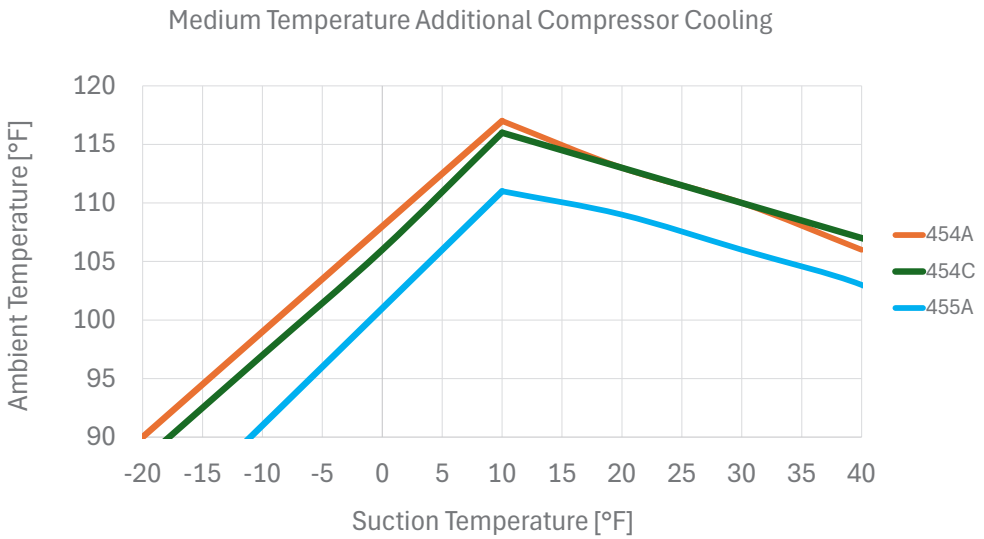

Additional compressor cooling is recommended for ambients above the lines shown.

- Additional compressor cooling option includes liquid injection (TREV), suction accumulator, and insulated suction line components and piping.

ADDITIONAL COMPRESSOR COOLING GRAPH

MEDIUM TEMPERATURE BITZER

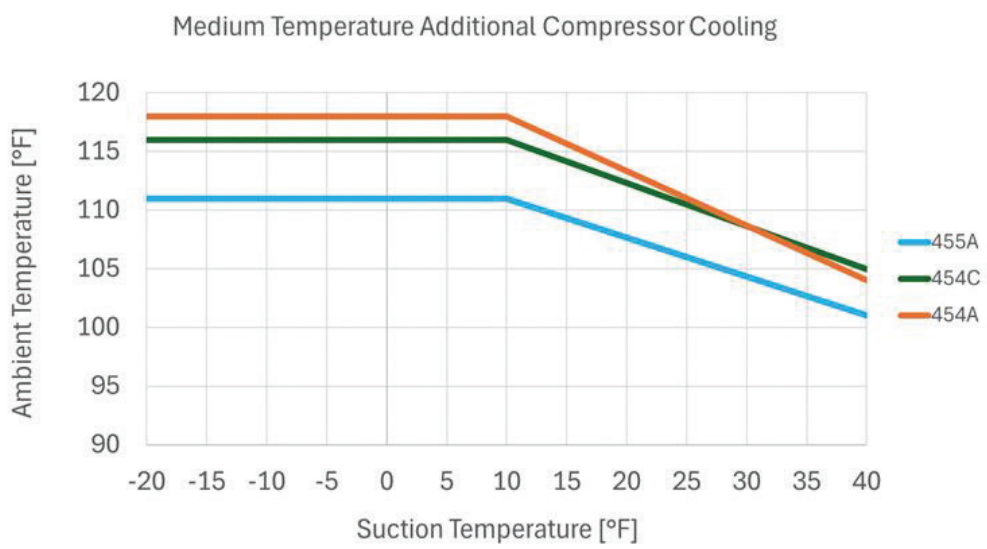

Additional compressor cooling is recommended for ambients above the lines shown.

- Additional compressor cooling option includes liquid injection (TREV), suction accumulator, and insulated suction line components and piping.

LOW TEMPERATURE // ALL MODELS

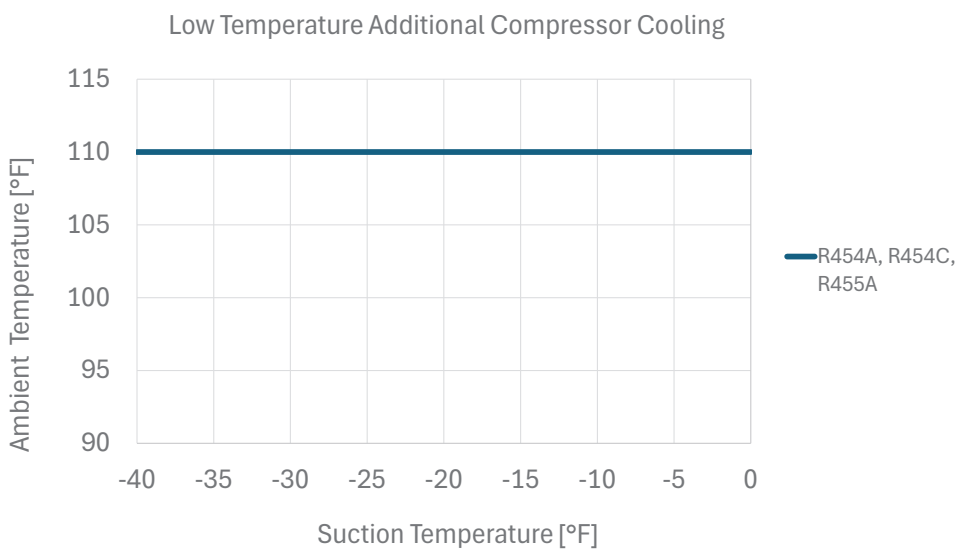

Additional compressor cooling is recommended for ambients above the lines shown.

- Additional compressor cooling option includes insulated suction line components and piping.

ELECTRICAL DATA // DISCUS

208-230V/3/60 Hz, 200-220V/3/50 Hz										
Base Model No.	Compressor Model No.	RLA	LRA	Cond. Fan FLA	Air Defrost[1] or No Defrost Provisions		Electric Defrost[2]		Electric Defrost Amps	Evap. Fan Amps
					MCA	MOPD	MCA	MOPD		
R*DS004M4A**	2YC3R51KE	20.0	120.0	3.8	29.7	45	51.0	60	40	15
R*DS005M4A**	2YD3R59KE	20.0	120.0	3.8	29.7	45	51.0	60	40	15
R*DS006M4A**	2YL3R73KE	28.3	169.0	7.5	43.8	70	63.8	90	48	20
R*DS007M4A**	2YA3R82K0	28.7	169.0	7.5	44.3	70	64.3	90	48	20
R*DS008M4A**	3YA3R99KE	36.8	215.0	7.5	54.5	90	76.0	110	60	20
R*DS010M4A**	3YB3R11ME	39.1	215.0	7.5	57.3	90	77.3	110	60	20
R*DS012M4A**	3YF3R14ME	43.2	275.0	7.5	62.5	100	82.5	125	60	20
R*DS015M4A**	3YS3R16ME	53.5	275.0	7.5	75.3	125	95.3	125	60	20
R*DS003L4A**	2YF3F13KE	14.4	102	5.2	24.2	35	44.8	50	35	12
R*DS004L4A**	2YL3F15KE	23.6	161	5.2	35.7	50	61.0	80	48	20
R*DS005L4A**	2YA3F17KE	25.8	161	5.2	38.5	60	61.0	80	48	20
R*DS006L4A**	3YA3F21KE	24	150	10.4	41.4	60	61.4	80	48	20
R*DS008L4A**	3YB3F24KE	27.6	161	10.4	45.9	70	76.0	90	60	20
R*DS009L4A**	3YF3F29KE	33.2	215	10.4	52.9	80	76.0	100	60	20
R*DS010L4A**	3YS3F33KE	37.2	215	10.4	57.9	90	77.9	110	60	20
R*DS012L4A**	4YBNF40KE	46	220	10.4	68.9	110	88.9	125	60	20
R*DS015L4A**	4YHNF46KE	47.2	278	10.4	70.4	110	90.4	125	60	20
R*DS022L4A**	4YJDF59KE	57.7	374	10.4	83.5	125	121.0	150	96	25

* Each asterisk represents a variable character based upon model, voltage, and vintage ordered. See page 4 for nomenclature.
RLA = Rated Load Amps **LRA** = Locked Rotor Amps **MCA** = Minimum Circuit Ampacity **MOPD** = Maximum Overcurrent Protection
MCA includes 1 amp allowance for control circuit requirement.
[1] Air Defrost values do not include evaporator fan electrical load.
[2] Electric Defrost MCA and MOPD columns provide a representative rating point for a typical electric defrost application. Contact Application Engineering to verify MCA and MOPD values when the applied electric defrost amp load exceeds the listed Defrost Amps shown in the above table.

ELECTRICAL DATA // DISCUS

460V/3/60 Hz, 380V/3/50 Hz

Base Model No.	Compressor Model No.	RLA	LRA	Cond. Fan FLA	Air Defrost[1] or No Defrost Provisions		Electric Defrost[2]		Electric Defrost Amps	Evap. Fan Amps
					MCA	MOPD	MCA	MOPD		
R*DS004M4A**	2YC3R51KE	9.4	60.0	1.9	14.6	20	20.6	25	15	6
R*DS005M4A**	2YD3R59KE	9.4	60.0	1.9	14.6	20	20.6	25	15	6
R*DS006M4A**	2YL3R73KE	12.4	85.0	3.7	20.2	30	31.0	35	24	6
R*DS007M4A**	2YA3R82K0	12.6	85.0	3.7	20.4	30	31.0	35	24	6
R*DS008M4A**	3YA3R99KE	17.9	106.0	3.7	27.0	40	44.7	50	35	9
R*DS010M4A**	3YB3R11ME	17.9	106.0	3.7	27.0	40	44.7	50	35	9
R*DS012M4A**	3YF3R14ME	21.2	138.0	3.7	31.2	50	44.7	60	35	9
R*DS015M4A**	3YS3R16ME	26.0	138.0	3.7	37.2	60	61.0	70	48	10
R*DS003L4A**	2YF3F13KE	7.1	52	3	15.0	20	19.8	25	15	6
R*DS004L4A**	2YL3F15KE	9.2	60	3	15.5	25	21.5	30	15	6
R*DS005L4A**	2YA3F17KE	9.2	60	3	15.5	25	21.5	30	15	6
R*DS006L4A**	3YA3F21KE	10.8	77	6	20.5	30	26.5	35	20	6
R*DS008L4A**	3YB3F24KE	14.1	83	6	24.6	35	38.5	45	30	6
R*DS009L4A**	3YF3F29KE	15	106	6	25.8	40	44.8	50	35	9
R*DS010L4A**	3YS3F33KE	16.7	106	6	27.9	45	44.8	50	35	9
R*DS012L4A**	4YBNF40KE	23	110	6	35.8	60	51.0	70	40	10
R*DS015L4A**	4YHNF46KE	23.6	139	6	36.5	60	51.0	70	40	10
R*DS022L4A**	4YJDF59KE	28.8	187	6	43.0	70	61.0	80	48	10

* Each asterisk represents a variable character based upon model, voltage, and vintage ordered. See page 4 for nomenclature.
RLA = Rated Load Amps **LRA** = Locked Rotor Amps **MCA** = Minimum Circuit Ampacity **MOPD** = Maximum Overcurrent Protection
MCA includes 1 amp allowance for control circuit requirement.
[1] Air Defrost values do not include evaporator fan electrical load.
[2] Electric Defrost MCA and MOPD columns provide a representative rating point for a typical electric defrost application. Contact Application Engineering to verify MCA and MOPD values when the applied electric defrost amp load exceeds the listed Defrost Amps shown in the above table.

ELECTRICAL DATA // SCROLL

208-230V/3/60 Hz, 200-220V/3/50 Hz

Base Model No.	Compressor Model No.	RLA	LRA	Cond. Fan FLA	Air Defrost[1] or No Defrost Provisions		Electric Defrost[2]		Electric Defrost Amps	Evap. Fan Amps
					MCA	MOPD	MCA	MOPD		
R*OS004E4A**	YS26KAE	18.4	114.0	3.8	27.7	45	44.7	50	35	12
R*OS005E4A**	YS30KAE	20.0	114.0	3.8	29.7	45	44.7	60	35	12
R*OS006E4A**	YS33KAE	19.2	123.0	3.8	28.7	45	51.0	60	40	15
R*OS007E4A**	YS40KAE	21.5	156.0	7.5	35.3	50	61.0	70	48	20
R*OS008E4A**	YB51KAE	30.8	195.0	7.5	47.0	70	67.0	90	48	20
R*OS009E4A**	YB56KAE	35.3	225.0	7.5	52.6	80	76.0	100	60	20
R*OS010E4A**	YB68KAE	38.6	239.0	7.5	56.7	90	76.7	110	60	20
R*OS013E4A**	YB83KAE	47.4	298.0	7.5	67.7	110	87.7	125	60	20
R*OS015E4A**	YB100KAE	56.5	321.0	7.5	79.1	125	99.1	150	60	20
R*OS008L4A**	YF19KAE	23.3	223	5.2	35.3	60	61.0	80	48	20
R*OS010L4A**	YF26KAE	33.3	239	10.4	53.0	80	73.0	100	50	20
R*OS013L4A**	YF32KAE	37.8	59	10.4	58.7	90	78.7	110	60	20
R*OS015L4A**	YF38KAE	45.5	338.7	10.4	68.3	110	88.3	125	60	20

460V/3/60 Hz, 380V/3/50 Hz

Base Model No.	Compressor Model No.	RLA	LRA	Cond. Fan FLA	Air Defrost[1] or No Defrost Provisions		Electric Defrost[2]		Electric Defrost Amps	Evap. Fan Amps
					MCA	MOPD	MCA	MOPD		
R*OS004E4A**	YS26KAE	8.4	58.0	1.9	13.3	20	19.7	25	15	6
R*OS005E4A**	YS30KAE	9.0	52.0	1.9	14.1	20	20.1	25	15	6
R*OS006E4A**	YS33KAE	8.7	62.0	1.9	13.7	20	19.7	25	15	6
R*OS007E4A**	YS40KAE	8.3	75.0	3.7	15.0	20	21.0	25	15	6
R*OS008E4A**	YB51KAE	16.0	95.0	3.7	24.7	40	31.0	45	24	6
R*OS009E4A**	YB56KAE	15.4	114.0	3.7	23.9	35	31.0	45	24	6
R*OS010E4A**	YB68KAE	18.6	125.0	3.7	27.9	45	38.5	50	30	6
R*OS013E4A**	YB83KAE	21.8	150.0	3.7	31.9	50	51.0	60	40	10
R*OS015E4A**	YB100KAE	24.4	179.0	3.7	35.2	50	51.0	60	40	10
R*OS008L4A**	YF19KAE	10.6	99	3	17.3	25	26.0	35	20	6
R*OS010L4A**	YF26KAE	16	125	6	27.0	40	38.5	50	30	6
R*OS013L4A**	YF32KAE	17.3	125	6	28.6	45	44.8	50	35	9
R*OS015L4A**	YF38KAE	18.1	139	6	29.6	45	44.8	50	35	9

* Each asterisk represents a variable character based upon model, voltage, and vintage ordered. See page 4 for nomenclature.

RLA = Rated Load Amps **LRA** = Locked Rotor Amps **MCA** = Minimum Circuit Ampacity **MOPD** = Maximum Overcurrent Protection

MCA includes 1 amp allowance for control circuit requirement.

[1] Air Defrost values do not include evaporator fan electrical load.

[2] Electric Defrost MCA and MOPD columns provide a representative rating point for a typical electric defrost application. Contact Application Engineering to verify MCA and MOPD values when the applied electric defrost amp load exceeds the listed Defrost Amps shown in the above table.

ELECTRICAL DATA // BITZER

208-230V/3/60 Hz, 200-220V/3/50 Hz

Base Model No.	Compressor Model No.	RLA	LRA	Cond. Fan FLA	Air Defrost[1] or No Defrost Provisions		Electric Defrost[2]		Electric Defrost Amps	Evap. Fan Amps
					MCA	MOPD	MCA	MOPD		
R*BS003E4A**	2DES-3	15.3	97.0	3.8	23.8	35	44.7	50	35	12
R*BS004E4A**	2CES-4	18.2	115.5	3.8	27.5	45	44.7	50	35	12
R*BS005E4A**	4FES-5	24.2	163.0	3.8	35.0	50	61.0	70	48	20
R*BS006E4A**	4EES-6	28.1	163.0	7.5	43.6	70	63.6	90	48	20
R*BS007E4A**	4DES-7	31.0	215.0	7.5	47.2	70	67.2	90	48	20
R*BS008E4A**	4CES-9	34.2	215.0	7.5	51.2	80	71.2	100	48	20
R*BS010E4A**	4TES-12	42.3	252.0	7.5	61.3	100	81.3	110	48	20
R*BS012E4A**	4PES-15	48.7	294.0	7.5	69.3	110	89.3	125	60	20
R*BS015E4A**	4NES-20	57.7	352.0	7.5	80.6	125	100.6	150	60	20
R*BS003L4A**	4FES-3	18	115.5	5.2	28.7	45	44.8	60	35	12
R*BS004L4A**	4EES-4	20.1	142	5.2	31.3	50	51.0	60	40	15
R*BS005L4A**	4DES-5	20.6	163	5.2	32.0	50	51.0	60	40	15
R*BS006L4A**	4CES-6	25	215	5.2	37.5	60	61.0	80	48	20
R*BS008L4A**	4TES-9	28.2	180	10.4	46.7	70	76.0	90	60	20
R*BS009L4A**	4PES-12	34.6	222	10.4	54.7	90	76.0	110	60	20
R*BS010L4A**	4NES-14	39.7	252	10.4	61.0	100	81.0	110	60	20
R*BS012L4A**	4JE-15	50	352	10.4	73.9	125	93.9	125	60	20
R*BS015L4A**	4HE-18	54.1	352	10.4	79.0	125	99.0	150	60	20
R*BS022L4A**	4GE-23	57.7	352	10.4	83.5	125	121.0	150	96	25

* Each asterisk represents a variable character based upon model, voltage, and vintage ordered. See page 4 for nomenclature.
RLA = Rated Load Amps **LRA** = Locked Rotor Amps **MCA** = Minimum Circuit Ampacity **MOPD** = Maximum Overcurrent Protection
MCA includes 1 amp allowance for control circuit requirement.
[1] Air Defrost values do not include evaporator fan electrical load.
[2] The electric defrost MCA, MOPD and EVAP FAN AMP columns provide representative rating points for a typical electric defrost application. Contact Application Engineering to recalculate MCA and MOPD values if the actual electric defrost load exceeds the defrost or fan amp values shown in the table above.

ELECTRICAL DATA // BITZER

460V/3/60 Hz, 380V/3/50 Hz

Base Model No.	Compressor Model No.	RLA	LRA	Cond. Fan FLA	Air Defrost[1] or No Defrost Provisions		Electric Defrost[2]		Electric Defrost Amps	Evap. Fan Amps
					MCA	MOPD	MCA	MOPD		
R*BS003E4A**	2DES-3	7.2	39.5	1.9	11.8	15	19.7	25	15	6
R*BS004E4A**	2CES-4	8.1	47.5	1.9	12.9	20	19.7	25	15	6
R*BS005E4A**	4FES-5	13.1	66.5	1.9	19.2	30	31.0	35	24	6
R*BS006E4A**	4EES-6	13.4	66.5	3.7	21.4	30	31.0	40	24	6
R*BS007E4A**	4DES-7	15.3	88.0	3.7	23.8	35	38.5	45	30	6
R*BS008E4A**	4CES-9	17.1	88.0	3.7	26.0	40	44.7	50	35	9
R*BS010E4A**	4TES-12	21.2	126.0	3.7	31.2	50	44.7	60	35	9
R*BS012E4A**	4PES-15	24.4	147.0	3.7	35.2	50	51.0	60	40	10
R*BS015E4A**	4NES-20	28.8	176.0	3.7	40.7	60	61.0	70	48	10
R*BS003L4A**	4FES-3	8.1	47.5	3	15.0	20	20.1	25	15	6
R*BS004L4A**	4EES-4	9.2	58	3	15.5	25	21.5	30	15	6
R*BS005L4A**	4DES-5	10.8	66.5	3	17.5	25	26.0	35	20	6
R*BS006L4A**	4CES-6	14.2	88	3	21.8	35	31.0	40	24	6
R*BS008L4A**	4TES-9	14.1	90	6	24.6	35	38.5	45	30	6
R*BS009L4A**	4PES-12	17.3	111	6	28.6	45	44.8	50	35	9
R*BS010L4A**	4NES-14	19.9	126	6	31.9	50	44.8	60	35	9
R*BS012L4A**	4JE-15	25	176	6	38.3	60	51.0	70	40	10
R*BS015L4A**	4HE-18	27.1	176	6	40.9	60	51.0	80	40	10
R*BS022L4A**	4GE-23	28.8	176	6	43.0	70	61.0	80	48	10

* Each asterisk represents a variable character based upon model, voltage, and vintage ordered. See page 4 for nomenclature.
RLA = Rated Load Amps **LRA** = Locked Rotor Amps **MCA** = Minimum Circuit Ampacity **MOPD** = Maximum Overcurrent Protection
MCA includes 1 amp allowance for control circuit requirement.
[1] Air Defrost values do not include evaporator fan electrical load.
[2] The electric defrost MCA, MOPD and EVAP FAN AMP columns provide representative rating points for a typical electric defrost application. Contact Application Engineering to recalculate MCA and MOPD values if the actual electric defrost load exceeds the defrost or fan amp values shown in the table above.

SPECIFICATIONS // ALL MODELS

MEDIUM TEMPERATURE DISCUS

Model No.	Comp. Model No.	HP	Connections (in.)		Pump Down Capacity					
					Standard Receiver			Oversized Receiver		
			Suction	Liquid	90% R454A (lbs.)	90% R454C (lbs.)	90% R455A (lbs.)	90% R454A (lbs.)	90% R454C (lbs.)	90% R455A (lbs.)
R*DS004M4A**	2YC3R51KE	4	1-3/8	5/8	20.8	21.3	21.1	44.2	45.3	44.8
R*DS005M4A**	2YD3R59KE	5	1-3/8	5/8	20.8	21.3	21.1	44.2	45.3	44.8
R*DS006M4A**	2YL3R73KE	6	1-5/8	5/8	44.2	45.3	44.8	75.1	76.8	76.1
R*DS007M4A**	2YA3R82K0	7	1-5/8	7/8	44.2	45.3	44.8	75.1	76.8	76.1
R*DS008M4A**	3YA3R99KE	8	1-5/8	7/8	44.2	45.3	44.8	75.1	76.8	76.1
R*DS010M4A**	3YB3R11ME	10	2-1/8	7/8	44.2	45.3	44.8	75.1	76.8	76.1
R*DS012M4A**	3YF3R14ME	12	2-1/8	7/8	49.1	50.3	49.8	75.1	76.8	76.1
R*DS015M4A**	3YS3R16ME	15	2-1/8	7/8	49.1	50.3	49.8	75.1	76.8	76.1

MEDIUM TEMPERATURE SCROLL

Model No.	Comp. Model No.	HP	Connections (in.)		Pump Down Capacity					
					Standard Receiver			Oversized Receiver		
			Suction	Liquid	90% R454A (lbs.)	90% R454C (lbs.)	90% R455A (lbs.)	90% R454A (lbs.)	90% R454C (lbs.)	90% R455A (lbs.)
R*OS004E4A**	YS26KAE	4	1-1/8	5/8	20.8	21.3	21.1	44.2	45.3	44.8
R*OS005E4A**	YS30KAE	5	1-1/8	5/8	20.8	21.3	21.1	44.2	45.3	44.8
R*OS006E4A**	YS33KAE	6	1-3/8	5/8	20.8	21.3	21.1	44.2	45.3	44.8
R*OS007E4A**	YS40KAE	7	1-3/8	5/8	44.2	45.3	44.8	75.1	76.8	76.1
R*OS008E4A**	YB51KAE	8	1-5/8	7/8	44.2	45.3	44.8	75.1	76.8	76.1
R*OS009E4A**	YB56KAE	9	1-5/8	7/8	44.2	45.3	44.8	75.1	76.8	76.1
R*OS010E4A**	YB68KAE	10	1-5/8	7/8	44.2	45.3	44.8	75.1	76.8	76.1
R*OS013E4A**	YB83KAE	13	2-1/8	7/8	49.1	50.3	49.8	75.1	76.8	76.1
R*OS015E4A**	YB100KAE	15	2-1/8	7/8	49.1	50.3	49.8	75.1	76.8	76.1

MEDIUM TEMPERATURE BITZER

Model No.	Comp. Model No.	HP	Connections (in.)		Pump Down Capacity					
					Standard Receiver			Oversized Receiver		
			Suction	Liquid	90% R454A (lbs.)	90% R454C (lbs.)	90% R455A (lbs.)	90% R454A (lbs.)	90% R454C (lbs.)	90% R455A (lbs.)
R*BS003E4A**	2DES-3	3	1-1/8	5/8	20.8	21.3	21.1	44.2	45.3	44.8
R*BS004E4A**	2CES-4	4	1-3/8	5/8	20.8	21.3	21.1	44.2	45.3	44.8
R*BS005E4A**	4FES-5	5	1-3/8	5/8	20.8	21.3	21.1	44.2	45.3	44.8
R*BS006E4A**	4EES-6	6	1-5/8	5/8	44.2	45.3	44.8	75.1	76.8	76.1
R*BS007E4A**	4DES-7	7	1-5/8	7/8	44.2	45.3	44.8	75.1	76.8	76.1
R*BS008E4A**	4CES-9	8	1-5/8	7/8	44.2	45.3	44.8	75.1	76.8	76.1
R*BS010E4A**	4TES-12	10	2-1/8	7/8	44.2	45.3	44.8	75.1	76.8	76.1
R*BS012E4A**	4PES-15	12	2-1/8	7/8	49.1	50.3	49.8	75.1	76.8	76.1
R*BS015E4A**	4NES-20	15	2-1/8	7/8	49.1	50.3	49.8	75.1	76.8	76.1

* Each asterisk represents a variable character based upon model, voltage, and vintage ordered. See page 4 for nomenclature.

SPECIFICATIONS // ALL MODELS

MEDIUM TEMPERATURE DISCUS

Model No.	Comp. Model No.	HP	Connections (in.)		Pump Down Capacity					
					Standard Receiver			Oversized Receiver		
			Suction	Liquid	90% R404A (lbs.)	90% R407A/C/F (lbs.)	90% R448A, R449A (lbs.)	90% R404A (lbs.)	90% R407A/C/F (lbs.)	90% R448A, R449A (lbs.)
R*DS004M4A**	2YC3R51KE	4	1-3/8	5/8	21.2	23.4	22.4	45.1	49.7	47.6
R*DS005M4A**	2YD3R59KE	5	1-3/8	5/8	21.2	23.4	22.4	45.1	49.7	47.6
R*DS006M4A**	2YL3R73KE	6	1-5/8	5/8	45.1	49.7	47.6	76.5	84.3	80.8
R*DS007M4A**	2YA3R82K0	7	1-5/8	7/8	45.1	49.7	47.6	76.5	84.3	80.8
R*DS008M4A**	3YA3R99KE	8	1-5/8	7/8	45.1	49.7	47.6	76.5	84.3	80.8
R*DS010M4A**	3YB3R11ME	10	2-1/8	7/8	45.1	49.7	47.6	76.5	84.3	80.8
R*DS012M4A**	3YF3R14ME	12	2-1/8	7/8	50.1	55.2	52.9	76.5	84.3	80.8
R*DS015M4A**	3YS3R16ME	15	2-1/8	7/8	50.1	55.2	52.9	76.5	84.3	80.8

LOW TEMPERATURE SCROLL

Model No.	Comp. Model No.	HP	Connections (in.)		Pump Down Capacity					
					Standard Receiver			Oversized Receiver		
			Suction	Liquid	90% R404A (lbs.)	90% R407A/C/F (lbs.)	90% R448A, R449A (lbs.)	90% R404A (lbs.)	90% R407A/C/F (lbs.)	90% R448A, R449A (lbs.)
R*OS004E4A**	YS26KAE	4	1-1/8	5/8	21.2	23.4	22.4	45.1	49.7	47.6
R*OS005E4A**	YS30KAE	5	1-1/8	5/8	21.2	23.4	22.4	45.1	49.7	47.6
R*OS006E4A**	YS33KAE	6	1-3/8	5/8	21.2	23.4	22.4	45.1	49.7	47.6
R*OS007E4A**	YS40KAE	7	1-3/8	5/8	45.1	49.7	47.6	76.5	84.3	80.8
R*OS008E4A**	YB51KAE	8	1-5/8	7/8	45.1	49.7	47.6	76.5	84.3	80.8
R*OS009E4A**	YB56KAE	9	1-5/8	7/8	45.1	49.7	47.6	76.5	84.3	80.8
R*OS010E4A**	YB68KAE	10	1-5/8	7/8	45.1	49.7	47.6	76.5	84.3	80.8
R*OS013E4A**	YB83KAE	13	2-1/8	7/8	50.1	55.2	52.9	76.5	84.3	80.8
R*OS015E4A**	YB100KAE	15	2-1/8	7/8	50.1	55.2	52.9	76.5	84.3	80.8

LOW TEMPERATURE BITZER

Model No.	Comp. Model No.	HP	Connections (in.)		Pump Down Capacity					
					Standard Receiver			Oversized Receiver		
			Suction	Liquid	90% R404A (lbs.)	90% R407A/C/F (lbs.)	90% R448A, R449A (lbs.)	90% R404A (lbs.)	90% R407A/C/F (lbs.)	90% R448A, R449A (lbs.)
R*BS003E4A**	2DES-3	3	1-1/8	5/8	21.2	23.4	22.4	45.1	49.7	47.6
R*BS004E4A**	2CES-4	4	1-3/8	5/8	21.2	23.4	22.4	45.1	49.7	47.6
R*BS005E4A**	4FES-5	5	1-3/8	5/8	21.2	23.4	22.4	45.1	49.7	47.6
R*BS006E4A**	4EES-6	6	1-5/8	5/8	45.1	49.7	47.6	76.5	84.3	80.8
R*BS007E4A**	4DES-7	7	1-5/8	7/8	45.1	49.7	47.6	76.5	84.3	80.8
R*BS008E4A**	4CES-9	8	1-5/8	7/8	45.1	49.7	47.6	76.5	84.3	80.8
R*BS010E4A**	4TES-12	10	2-1/8	7/8	45.1	49.7	47.6	76.5	84.3	80.8
R*BS012E4A**	4PES-15	12	2-1/8	7/8	50.1	55.2	52.9	76.5	84.3	80.8
R*BS015E4A**	4NES-20	15	2-1/8	7/8	50.1	55.2	52.9	76.5	84.3	80.8

* Each asterisk represents a variable character based upon model, voltage, and vintage ordered. See page 4 for nomenclature.

SPECIFICATIONS // ALL MODELS

LOW TEMPERATURE DISCUS

Model No.	Comp. Model No.	HP	Connections (in.)		Pump Down Capacity					
					Standard Receiver			Oversized Receiver		
			Suction	Liquid	90% R454A (lbs.)	90% R454C (lbs.)	90% R455A (lbs.)	90% R454A (lbs.)	90% R454C (lbs.)	90% R455A (lbs.)
R*DS003L4A**	2YF3F13KE	3	1-3/8	1/2	20.8	21.3	21.1	44.2	45.3	44.8
R*DS004L4A**	2YL3F15KE	4	1-3/8	1/2	20.8	21.3	21.1	44.2	45.3	44.8
R*DS005L4A**	2YA3F17KE	5	1-3/8	1/2	20.8	21.3	21.1	44.2	45.3	44.8
R*DS006L4A**	3YA3F21KE	6	1-5/8	5/8	44.2	45.3	44.8	75.1	76.8	76.1
R*DS008L4A**	3YB3F24KE	8	1-5/8	5/8	44.2	45.3	44.8	75.1	76.8	76.1
R*DS009L4A**	3YF3F29K0	9	2-1/8	5/8	44.2	45.3	44.8	75.1	76.8	76.1
R*DS010L4A**	3YS3F33KE	10	2-1/8	5/8	44.2	45.3	44.8	75.1	76.8	76.1
R*DS012L4A**	4YBNF40KE	12	2-1/8	5/8	44.2	45.3	44.8	75.1	76.8	76.1
R*DS015L4A**	4YHNF46KE	15	2-1/8	5/8	44.2	45.3	44.8	75.1	76.8	76.1
R*DS022L4A**	4YJDF59KE	22	2-1/8	7/8	49.1	50.3	49.8	75.1	76.8	76.1

LOW TEMPERATURE SCROLL

Model No.	Comp. Model No.	HP	Connections (in.)		Pump Down Capacity					
					Standard Receiver			Oversized Receiver		
			Suction	Liquid	90% R454A (lbs.)	90% R454C (lbs.)	90% R455A (lbs.)	90% R454A (lbs.)	90% R454C (lbs.)	90% R455A (lbs.)
R*OS008L4A**	YF19KAE	8	1-5/8	1/2	20.8	21.3	21.1	44.2	45.3	44.8
R*OS010L4A**	YF26KAE	10	1-5/8	5/8	44.2	45.3	44.8	75.1	76.8	76.1
R*OS013L4A**	YF32KAE	13	2-1/8	5/8	44.2	45.3	44.8	75.1	76.8	76.1
R*OS015L4A**	YF38KAE	15	2-1/8	5/8	44.2	45.3	44.8	75.1	76.8	76.1

LOW TEMPERATURE BITZER

Model No.	Comp. Model No.	HP	Connections (in.)		Pump Down Capacity					
					Standard Receiver			Oversized Receiver		
			Suction	Liquid	90% R454A (lbs.)	90% R454C (lbs.)	90% R455A (lbs.)	90% R454A (lbs.)	90% R454C (lbs.)	90% R455A (lbs.)
R*BS003L4A**	4FES-3	3	1-3/8	1/2	20.8	21.3	21.1	44.2	45.3	44.8
R*BS004L4A**	4EES-4	4	1-3/8	1/2	20.8	21.3	21.1	44.2	45.3	44.8
R*BS005L4A**	4DES-5	5	1-3/8	1/2	20.8	21.3	21.1	44.2	45.3	44.8
R*BS006L4A**	4CES-6	6	1-5/8	1/2	20.8	21.3	21.1	44.2	45.3	44.8
R*BS008L4A**	4TES-9	8	1-5/8	5/8	44.2	45.3	44.8	75.1	76.8	76.1
R*BS009L4A**	4PES-12	9	1-5/8	5/8	44.2	45.3	44.8	75.1	76.8	76.1
R*BS010L4A**	4NES-14	10	2-1/8	5/8	44.2	45.3	44.8	75.1	76.8	76.1
R*BS012L4A**	4JE-15	12	2-1/8	5/8	44.2	45.3	44.8	75.1	76.8	76.1
R*BS015L4A**	4HE-18	15	2-1/8	5/8	44.2	45.3	44.8	75.1	76.8	76.1
R*BS022L4A**	4GE-23	22	2-1/8	7/8	49.1	50.3	49.8	75.1	76.8	76.1

* Each asterisk represents a variable character based upon model, voltage, and vintage ordered. See page 4 for nomenclature.

SPECIFICATIONS // ALL MODELS

LOW TEMPERATURE DISCUS

Model No.	Comp. Model No.	HP	Connections (in.)		Pump Down Capacity					
					Standard Receiver			Oversized Receiver		
			Suction	Liquid	90% R404A (lbs.)	90% R407A/C/F (lbs.)	90% R448A, R449A (lbs.)	90% R404A (lbs.)	90% R407A/C/F (lbs.)	90% R448A, R449A (lbs.)
R*DS003L4A**	2YF3F13KE	3	1-3/8	1/2	21.2	23.4	22.4	45.1	49.7	47.6
R*DS004L4A**	2YL3F15KE	4	1-3/8	1/2	21.2	23.4	22.4	45.1	49.7	47.6
R*DS005L4A**	2YA3F17KE	5	1-3/8	1/2	21.2	23.4	22.4	45.1	49.7	47.6
R*DS006L4A**	3YA3F21KE	6	1-5/8	5/8	45.1	49.7	47.6	76.5	84.3	80.8
R*DS008L4A**	3YB3F24KE	8	1-5/8	5/8	45.1	49.7	47.6	76.5	84.3	80.8
R*DS009L4A**	3YF3F29K0	9	2-1/8	5/8	45.1	49.7	47.6	76.5	84.3	80.8
R*DS010L4A**	3YS3F33KE	10	2-1/8	5/8	45.1	49.7	47.6	76.5	84.3	80.8
R*DS012L4A**	4YBNF40KE	12	2-1/8	5/8	45.1	49.7	47.6	76.5	84.3	80.8
R*DS015L4A**	4YHNF46KE	15	2-1/8	5/8	45.1	49.7	47.6	76.5	84.3	80.8
R*DS022L4A**	4YJDF59KE	22	2-1/8	7/8	50.1	55.2	52.9	76.5	84.3	80.8

LOW TEMPERATURE SCROLL

Model No.	Comp. Model No.	HP	Connections (in.)		Pump Down Capacity					
					Standard Receiver			Oversized Receiver		
			Suction	Liquid	90% R404A (lbs.)	90% R407A/C/F (lbs.)	90% R448A, R449A (lbs.)	90% R404A (lbs.)	90% R407A/C/F (lbs.)	90% R448A, R449A (lbs.)
R*OS008L4A**	YF19KAE	8	1-5/8	1/2	21.2	23.4	22.4	45.1	49.7	47.6
R*OS010L4A**	YF26KAE	10	1-5/8	5/8	45.1	49.7	47.6	76.5	84.3	80.8
R*OS013L4A**	YF32KAE	13	2-1/8	5/8	45.1	49.7	47.6	76.5	84.3	80.8
R*OS015L4A**	YF38KAE	15	2-1/8	5/8	45.1	49.7	47.6	76.5	84.3	80.8

LOW TEMPERATURE BITZER

Model No.	Comp. Model No.	HP	Connections (in.)		Pump Down Capacity					
					Standard Receiver			Oversized Receiver		
			Suction	Liquid	90% R404A (lbs.)	90% R407A/C/F (lbs.)	90% R448A, R449A (lbs.)	90% R404A (lbs.)	90% R407A/C/F (lbs.)	90% R448A, R449A (lbs.)
R*BS003L4A**	4FES-3	3	1-3/8	1/2	21.2	23.4	22.4	45.1	49.7	47.6
R*BS004L4A**	4EES-4	4	1-3/8	1/2	21.2	23.4	22.4	45.1	49.7	47.6
R*BS005L4A**	4DES-5	5	1-3/8	1/2	21.2	23.4	22.4	45.1	49.7	47.6
R*BS006L4A**	4CES-6	6	1-5/8	1/2	21.2	23.4	22.4	45.1	49.7	47.6
R*BS008L4A**	4TES-9	8	1-5/8	5/8	45.1	49.7	47.6	76.5	84.3	80.8
R*BS009L4A**	4PES-12	9	1-5/8	5/8	45.1	49.7	47.6	76.5	84.3	80.8
R*BS010L4A**	4NES-14	10	2-1/8	5/8	45.1	49.7	47.6	76.5	84.3	80.8
R*BS012L4A**	4JE-15	12	2-1/8	5/8	45.1	49.7	47.6	76.5	84.3	80.8
R*BS015L4A**	4HE-18	15	2-1/8	5/8	45.1	49.7	47.6	76.5	84.3	80.8
R*BS022L4A**	4GE-23	22	2-1/8	7/8	50.1	55.2	52.9	76.5	84.3	80.8

* Each asterisk represents a variable character based upon model, voltage, and vintage ordered. See page 4 for nomenclature.

SPECIFICATIONS // ALL MODELS

MEDIUM TEMPERATURE DISCUS

Model No.	Comp. Model No.	Cabinet Size†	Fan Qty.	Dimensions (in.)			Approx. Ship Wt. (lbs.)
				D	W	H	
R*DS004M4A**	2YC3R51KE	FD1	1	49	38-5/16	36-3/8	825
R*DS005M4A**	2YD3R59KE	FD1	1	49	38-5/16	36-3/8	850
R*DS006M4A**	2YL3R73KE	FD2	2	49	68-5/16	36-3/8	1,075
R*DS007M4A**	2YA3R82K0	FD2	2	49	68-5/16	36-3/8	1,100
R*DS008M4A**	3YA3R99KE	FD2	2	49	68-5/16	36-3/8	1,130
R*DS010M4A**	3YB3R11ME	FD2	2	49	68-5/16	36-3/8	1,330
R*DS012M4A**	3YF3R14ME	FD3	2	49	68-5/16	43-7/8	1,330
R*DS015M4A**	3YS3R16ME	FD3	2	49	68-5/16	43-7/8	1,350

EXTENDED RANGE MEDIUM TEMPERATURE SCROLL

Model No.	Comp. Model No.	Cabinet Size†	Fan Qty.	Dimensions (in.)			Approx. Ship Wt. (lbs.)
				D	W	H	
R*OS004E4A**	YS26KAE	FD1	1	49	38-5/16	36-3/8	700
R*OS005E4A**	YS30KAE	FD1	1	49	38-5/16	36-3/8	710
R*OS006E4A**	YS33KAE	FD1	1	49	38-5/16	36-3/8	710
R*OS007E4A**	YS40KAE	FD2	2	49	68-5/16	36-3/8	870
R*OS008E4A**	YB51KAE	FD2	2	49	68-5/16	36-3/8	915
R*OS009E4A**	YB56KAE	FD2	2	49	68-5/16	36-3/8	980
R*OS010E4A**	YB68KAE	FD2	2	49	68-5/16	36-3/8	1,085
R*OS013E4A**	YB83KAE	FD3	2	49	68-5/16	43-7/8	1,105
R*OS015E4A**	YB100KAE	FD3	2	49	68-5/16	43-7/8	1,200

EXTENDED RANGE MEDIUM TEMPERATURE BITZER

Model No.	Comp. Model No.	Cabinet Size†	Fan Qty.	Dimensions (in.)			Approx. Ship Wt. (lbs.)
				D	W	H	
R*BS003E4A**	2DES-3	FD1	1	49	38-5/16	36-3/8	800
R*BS004E4A**	2CES-4	FD1	1	49	38-5/16	36-3/8	825
R*BS005E4A**	4FES-5	FD1	1	49	38-5/16	36-3/8	850
R*BS006E4A**	4EES-6	FD2	2	49	68-5/16	36-3/8	1,075
R*BS007E4A**	4DES-7	FD2	2	49	68-5/16	36-3/8	1,100
R*BS008E4A**	4CES-9	FD2	2	49	68-5/16	36-3/8	1,130
R*BS010E4A**	4TES-12	FD2	2	49	68-5/16	36-3/8	1,330
R*BS012E4A**	4PES-15	FD3	2	49	68-5/16	43-7/8	1,330
R*BS015E4A**	4NES-20	FD3	2	49	68-5/16	43-7/8	1,350

* Each asterisk represents a variable character based upon model, voltage, and vintage ordered. See page 4 for nomenclature.

† See pages 63-65 for associated drawings.

SPECIFICATIONS // ALL MODELS

LOW TEMPERATURE DISCUS

Model No.	Comp. Model No.	Cabinet Size†	Fan Qty.	Dimensions (in.)			Approx. Ship Wt. (lbs.)
				D	W	H	
R*DS003L4A**	2YF3F13KE	FD1	1	49	38-5/16	36-3/8	710
R*DS004L4A**	2YL3F15KE	FD1	1	49	38-5/16	36-3/8	760
R*DS005L4A**	2YA3F17KE	FD1	1	49	38-5/16	36-3/8	805
R*DS006L4A**	3YA3F21KE	FD2	2	49	68-5/16	36-3/8	870
R*DS008L4A**	3YB3F24KE	FD2	2	49	68-5/16	36-3/8	1,130
R*DS009L4A**	3YF3F29KE	FD2	2	49	68-5/16	36-3/8	1,275
R*DS010L4A**	3YS3F33KE	FD2	2	49	68-5/16	36-3/8	1,275
R*DS012L4A**	4YBNF40KE	FD2	2	49	68-5/16	36-3/8	1,290
R*DS015L4A**	4YHNF46KE	FD2	2	49	68-5/16	36-3/8	1,310
R*DS022L4A**	4YJDF59KE	FD3	2	49	68-5/16	43-7/8	1,420

LOW TEMPERATURE SCROLL

Model No.	Comp. Model No.	Cabinet Size†	Fan Qty.	Dimensions (in.)			Approx. Ship Wt. (lbs.)
				D	W	H	
R*OS008L4A**	YF19KAE	FD1	1	49	38-5/16	36-3/8	850
R*OS010L4A**	YF26KAE	FD2	2	49	68-5/16	36-3/8	1,025
R*OS013L4A**	YF32KAE	FD2	2	49	68-5/16	36-3/8	1,050
R*OS015L4A**	YF38KAE	FD2	2	49	68-5/16	36-3/8	1,105

LOW TEMPERATURE BITZER

Model No.	Comp. Model No.	Cabinet Size†	Fan Qty.	Dimensions (in.)			Approx. Ship Wt. (lbs.)
				D	W	H	
R*BS003L4A**	4FES-3	FD1	1	49	38-5/16	36-3/8	710
R*BS004L4A**	4EES-4	FD1	1	49	38-5/16	36-3/8	760
R*BS005L4A**	4DES-5	FD1	1	49	38-5/16	36-3/8	805
R*BS006L4A**	4CES-6	FD1	1	49	38-5/16	36-3/8	870
R*BS008L4A**	4TES-9	FD2	2	49	68-5/16	36-3/8	1,130
R*BS009L4A**	4PES-12	FD2	2	49	68-5/16	36-3/8	1,275
R*BS010L4A**	4NES-14	FD2	2	49	68-5/16	36-3/8	1,275
R*BS012L4A**	4JE-15	FD2	2	49	68-5/16	36-3/8	1,290
R*BS015L4A**	4HE-18	FD2	2	49	68-5/16	36-3/8	1,310
R*BS022L4A**	4GE-23	FD3	2	49	68-5/16	43-7/8	1,420

* Each asterisk represents a variable character based upon model, voltage, and vintage ordered. See page 4 for nomenclature.

† See pages 63-65 for associated drawings.

DIMENSIONAL DRAWINGS

Figure 1: FD1

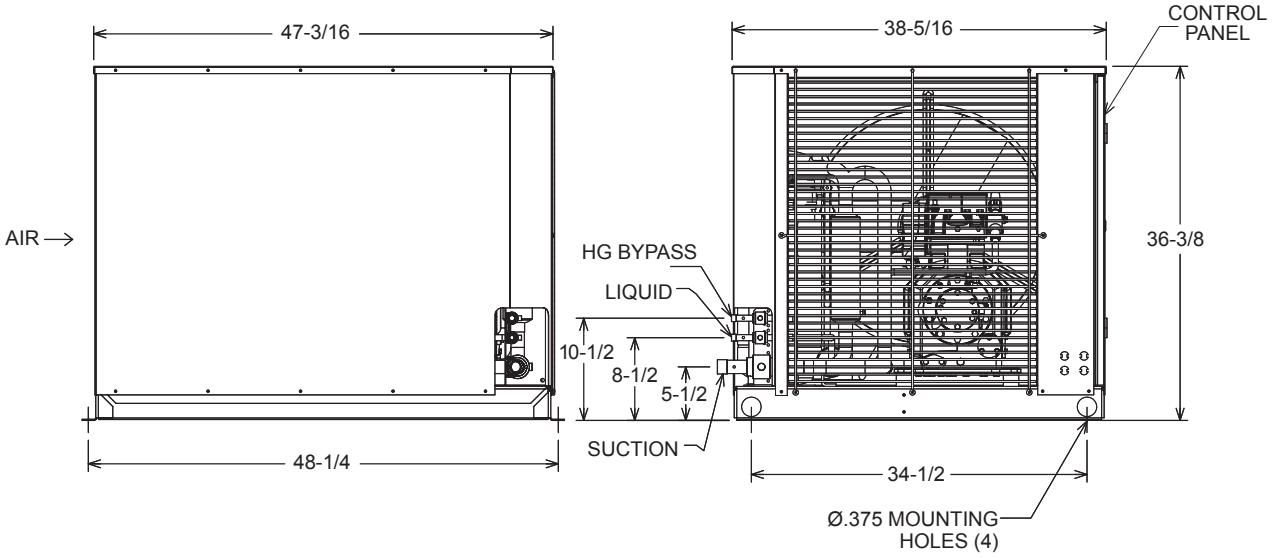

Dimensions are in inches.

DIMENSIONAL DRAWINGS

Figure 2: FD2

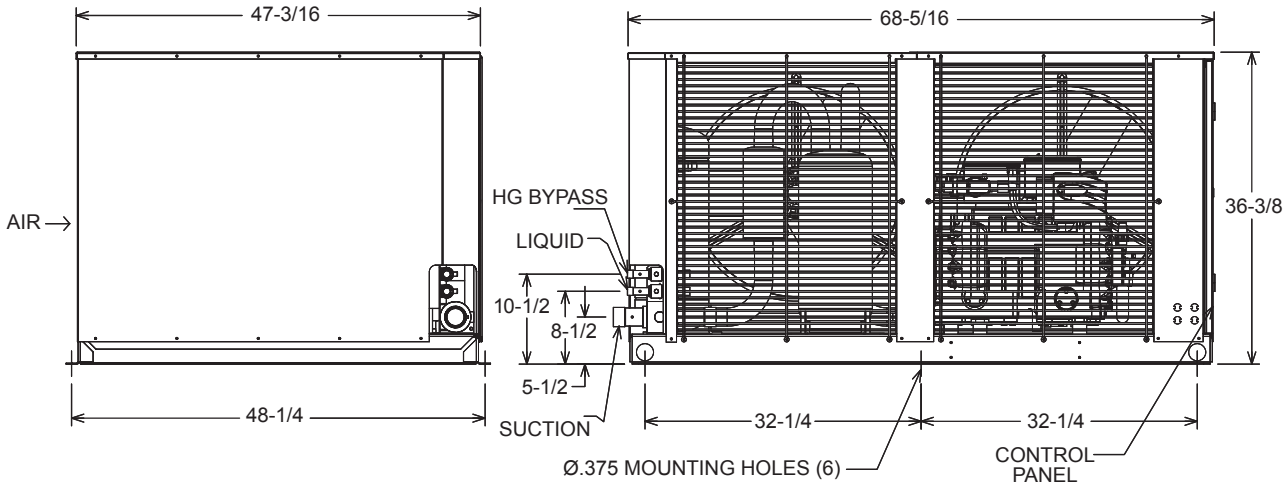

Dimensions are in inches.

DIMENSIONAL DRAWINGS

Figure 3: FD3

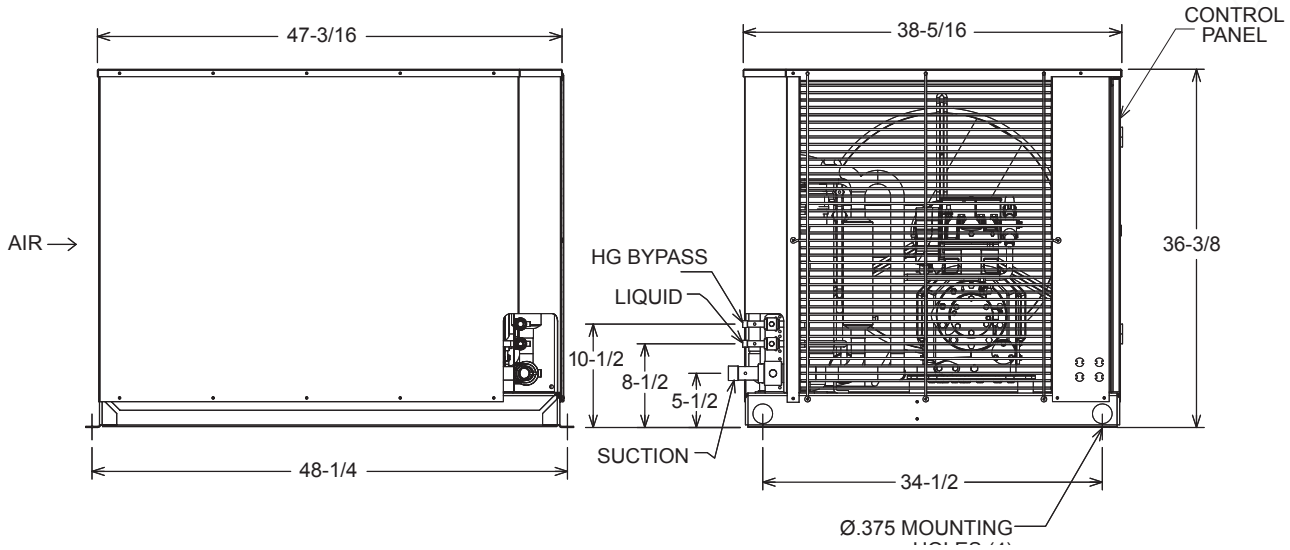

Dimensions are in inches.

DEPARTMENT OF ENERGY ANNUAL WALK-IN ENERGY FACTOR (AWEF) RATINGS

MEDIUM TEMPERATURE DISCUS

Department of Energy Annual Walk-In Energy Factor (AWEF) Ratings			
Base Model No.	**R454A**	**R454C**	**R455A**
R*DS004M4A**	7.6	7.6	7.6
R*DS005M4A**	7.6	7.6	7.6
R*DS006M4A**	7.6	7.6	7.6
R*DS007M4A**	7.6	7.6	7.6
R*DS008M4A**	7.6	7.6	7.6
R*DS010M4A**	7.6	7.6	7.6
R*DS012M4A**	7.6	7.6	7.6
R*DS015M4A**	7.6	7.6	7.6

EXTENDED RANGE MEDIUM TEMPERATURE SCROLL

Department of Energy Annual Walk-In Energy Factor (AWEF) Ratings			
Base Model No.	**R454A**	**R454C**	**R455A**
R*OS004E4A**	7.6	7.6	7.6
R*OS005E4A**	7.6	7.6	7.6
R*OS006E4A**	7.6	7.6	7.6
R*OS007E4A**	7.6	7.6	7.6
R*OS008E4A**	7.6	7.6	7.6
R*OS009E4A**	7.6	7.6	7.6
R*OS010E4A**	7.6	7.6	7.6
R*OS013E4A**	7.6	7.6	7.6
R*OS015E4A**	7.6	7.6	7.6

EXTENDED RANGE MEDIUM TEMPERATURE BITZER

Department of Energy Annual Walk-In Energy Factor (AWEF) Ratings			
Base Model No.	**R454A**	**R454C**	**R455A**
R*BS003E4A**	7.6	7.6	7.6
R*BS004E4A**	7.6	7.6	7.6
R*BS005E4A**	7.6	7.6	7.6
R*BS006E4A**	7.6	7.6	7.6
R*BS007E4A**	7.6	7.6	7.6
R*BS008E4A**	7.6	7.6	7.6
R*BS010E4A**	7.6	7.6	7.6
R*BS012E4A**	7.6	7.6	7.6
R*BS015E4A**	7.6	7.6	7.6

If model has a numerical value in the table above, the following statement applies:
"This refrigeration system is designed and certified for use in walk-in cooler applications."

DEPARTMENT OF ENERGY ANNUAL WALK-IN ENERGY FACTOR (AWEF) RATINGS

LOW TEMPERATURE DISCUS

Department of Energy Annual Walk-In Energy Factor (AWEF) Ratings			
Base Model No.	**R454A**	**R454C**	**R455A**
R*DS003L4A**	3.15	3.15	3.15
R*DS004L4A**	3.15	3.15	3.15
R*DS005L4A**	3.15	3.15	3.15
R*DS006L4A**	3.15	3.15	3.15
R*DS008L4A**	3.15	3.15	3.15
R*DS009L4A**	3.15	3.15	3.15
R*DS010L4A**	3.15	3.15	3.15
R*DS012L4A**	3.15	3.15	3.15
R*DS015L4A**	3.15	3.15	3.15
R*DS022L4A**	3.15	3.15	3.15

LOW TEMPERATURE SCROLL

Department of Energy Annual Walk-In Energy Factor (AWEF) Ratings			
Base Model No.	**R454A**	**R454C**	**R455A**
R*OS008L4A**	3.15	3.15	3.15
R*OS010L4A**	3.15	3.15	3.15
R*OS013L4A**	3.15	3.15	3.15
R*OS015L4A**	3.15	3.15	3.15

LOW TEMPERATURE BITZER

Department of Energy Annual Walk-In Energy Factor (AWEF) Ratings			
Base Model No.	**R454A**	**R454C**	**R455A**
R*BS003L4A**	3.15	3.15	3.15
R*BS004L4A**	3.15	3.15	3.15
R*BS005L4A**	3.15	3.15	3.15
R*BS006L4A**	3.15	3.15	3.15
R*BS008L4A**	3.15	3.15	3.15
R*BS009L4A**	3.15	3.15	3.15
R*BS010L4A**	3.15	3.15	3.15
R*BS012L4A**	3.15	3.15	3.15
R*BS015L4A**	3.15	3.15	3.15
R*BS022L4A**	3.15	3.15	3.15

If model has a numerical value in the table above, the following statement applies:
"This refrigeration system is designed and certified for use in walk-in freezer applications."

ENGINEERED FOR COOL.™

©2026 Heat Transfer Products Group

Published October 2026
RU-NG2-Dual-1026

russell.htpg.com

This information is the most current and accurate information available and is subject to change without notice. HTPG makes no warranty or guarantee of any kind, express or implied, regarding the information set forth herein, including without limitation warranty regarding its currency, accuracy or completeness or any warranty of merchantability or fitness for a particular purpose.