KRAMER

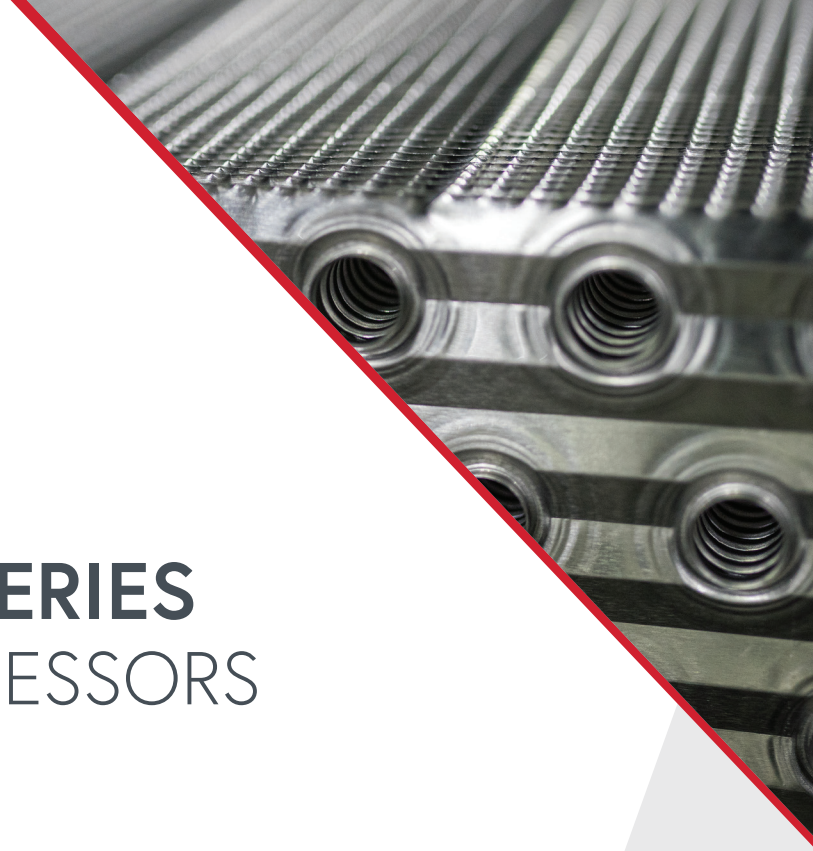

A1/A2L
DUAL-RATED QV-SERIES
WITH BITZER COMPRESSORS

15 to 100 HP Air-Cooled Condensing Units

FEATURES

The design of the innovative QV Series Condensing Units™ sets the new standard for efficiency, reliability and serviceability to meet the needs of the food processing, industrial cooling and warehousing industries. Models incorporate features from our award-winning Quantum Air™ Condensers such as the floating coil design with generously sized condensers for energy savings, swept wing fan blades for optimal air flow, and LED lighted control panel and hinged venturi panels for easy access. A floored compressor cabinet with removable compressor tray, service convenience outlet, hinged and removable access panels, integral liquid subcooling circuit, and paint protected galvanized steel housing are all standard features of these units.

FEATURES AND OPTIONS

● Standard ○ Optional ⊖ Not Available

DESCRIPTION		RF Flooded Models	RB Non-Flooded Models
GENERAL CONSTRUCTION	Vertical air discharge configuration	●	●
	Prepaint gray exterior/G60 Galvanized outdoor cabinet construction	●	●
	G90 Galvanized frame	●	●
	Service gauge hooks	●	●
	Mechanically formed pre-bent tubing reduces potential leaks	●	●
	High and low voltage electrical panels with hinged door	●	●
	Single point electrical connection	●	●
CONDENSER COIL AND FANS	Award-winning floating coil design	●	●
	Subcooling circuit	●	●
	Flip top condenser fan venturi(s)	●	●
	Swept wing fan blades for optional air flow	●	●
	Adjustable flooded head pressure control valve	●	⊖
COIL COATINGS	ElectroFin® or Bronz-Glow	○	○
COMPRESSORS	Bitzer compressor^	●	●
	Liquid injection on low temp. compressors	●	●
	Crankcase heater	●	●
	Electronic oil failure control	●	●
	Suction line and discharge line vibrasorbers	●	●
	Floored compressor cabinet with removable compressor tray	●	●
	Compressor unloading with suction pressure contactor	○	○
ELECTRICAL AND CONTROL PANEL	3 Phase condenser fan motors	●	●
	Hinged and removable access panels	●	●
	Separate power and control electrical panels	●	●
	Condenser fan contactors	●	●
	Control circuit and condenser fan fuses	●	●
	Single point alarm with liquid line solenoid lockout	●	●
	Pump down switch	●	●
	208-230 Control voltage	●	●
	Service and control LED control panel lighting (Panel door switch/service toggle)	●	●
	110 VAC20 Amp convenience outlet for field connection	●	●
	EC fan motors with electronic variable speed control	○	○
	Control circuit and condenser fan breakers	○	○
	Thru-the-door non-fused disconnect (200 amp Max)	○	○
	Thru-the-door fused disconnect (200 amp Max)	○	○
	Thru-the-door breaker disconnect (225 amp Max)	○	○
	Phase loss monitor (Symcom250A or ICM450)	○	○
	Air defrost timer or electric defrost components	○	○
	Up to 4 evaporators electric defrost kit	○	○
	Anti short cycle timer	○	○

FEATURES AND OPTIONS

● Standard ○ Optional ⊖ Not Available

	DESCRIPTION	RF Flooded Models	RB Non-Flooded Models
REFRIGERATION	High and low pressure controls	●	
	Color coded refrigerant hoses	●	
	Horizontal receiver	●	
	Receiver isolation valve	●	
	Refrigerant relief valve	●	
	Replaceable core liquid line filter	●	
	Liquid line isolation valve with sight glass	●	
	Oil management system	● PARALLEL	
	Heated and insulated receiver	○	
	Oil separator with check valve	○	
	Oversized receiver	○	
	Suction accumulator	○	
	Boil out suction accumulator	○	
	Liquid filter isolation valve	○	
	Liquid line solenoid valve (Shipped loose)	○	
	Suction isolation valve	○	
	Suction filter isolation valve	○	
	Replaceable core suction filter	○	
	Hot gas bypass (Discharge tee, regulator or ball valve)	○	
	Heat reclaim (Sporlan 3 way valve)	○	
	Crankcase pressure regulator	○	
	Electronic fan cycling control	○	●
	Minimum charge monitor	⊖	○
	Receiver level gauge	○	
	Additional compressor cooling for medium temp models - liquid injection, suction accumulator, and insulated suction line components and piping	○	
	Additional compressor cooling for low temp models - insulated suction line components and piping	○	

MODEL NOMENCLATURE

K	F	B	V	030	M	4A	G	A
Brand	Model Style	Compressor Type	Configuration	Horsepower	Temperature Range	Refrigerant Type	Voltage^	Vintage
K = Kramer	B = Non-Flooded F = Flooded	B = Bitzer Ecoline	V = Single Compressor D = Dual Piping P = Parallel Piping	030 = 30 HP	M = Medium Temp. L = Low Temp.	4A = Multiple Refrigerants*	E = 208-230/3/60 G = 460/3/60	A

^ 50 Hz available. Contact Factory for additional information.

* Refrigerants are R454A, R454C, R455A and R404A, R407A, R407C, R407F, R448A, R449A/B

CAPACITY DATA (BTUH)

MEDIUM TEMPERATURE R454A BITZER // SINGLE COMPRESSOR // 60 HZ‡

	Model No.	Comp. Model No.	Suction Temperature (°F)											
			45°	40°	35°	30°	25°	20°	15°	10°	5°	0°	-5°	-10°
90°F Ambient	K*BV015M4A*	4NE-20	198,480	182,890	167,880	153,510	139,810	126,960	114,810	102,650	91,820	80,980	71,550	62,120
	K*BV020M4A*	4JE-22	228,580	210,470	193,470	177,080	161,420	146,340	132,320	118,290	106,130	93,960	82,970	71,980
	K*BV025M4A*	4HE-25	260,140	240,090	221,540	203,850	186,100	169,520	153,780	138,040	124,460	110,870	98,330	85,790
	K*BV030M4A*	4GE-30	299,410	276,660	255,370	234,730	214,720	195,550	177,630	159,710	143,690	127,660	113,440	99,220
	K*BV035M4A*	6HE-35	393,780	362,590	334,080	305,980	278,990	253,230	229,580	205,920	184,850	163,780	145,700	127,610
	K*BV040M4A*	6GE-40	433,830	400,900	371,060	340,890	312,310	284,600	258,770	232,940	210,150	187,350	166,280	145,200
	K*BV050M4A*	6FE-50	521,980	483,600	447,450	412,330	378,640	345,470	314,700	283,920	256,630	229,340	204,000	178,650
95°F Ambient	K*BV015M4A*	4NE-20	190,330	175,010	161,170	147,100	133,860	121,320	109,630	97,940	87,480	77,010	67,960	58,910
	K*BV020M4A*	4JE-22	219,520	202,060	185,650	169,790	154,590	140,070	126,510	112,940	101,230	89,510	78,760	68,000
	K*BV025M4A*	4HE-25	250,050	230,660	212,660	195,410	178,510	162,210	147,110	132,010	118,490	104,960	93,210	81,450
	K*BV030M4A*	4GE-30	287,730	265,740	244,950	225,000	205,710	187,360	170,050	152,740	137,270	121,800	108,270	94,740
	K*BV035M4A*	6HE-35	378,220	348,170	320,580	293,770	267,600	242,870	219,920	196,970	176,640	156,300	138,570	120,840
	K*BV040M4A*	6GE-40	416,780	385,050	355,570	326,780	299,260	272,380	247,430	222,480	200,150	177,820	158,230	138,640
	K*BV050M4A*	6FE-50	500,030	462,970	428,790	395,460	362,790	331,040	301,460	271,870	244,860	217,840	193,720	169,590
100°F Ambient	K*BV015M4A*	4NE-20	-	168,260	154,000	140,960	127,850	115,990	104,690	93,380	83,380	73,370	64,880	56,380
	K*BV020M4A*	4JE-22	-	193,730	177,890	162,780	148,010	133,810	120,720	107,620	96,160	84,690	74,600	64,510
	K*BV025M4A*	4HE-25	-	221,000	203,930	186,940	170,710	154,990	140,450	125,900	112,850	99,800	88,090	76,380
	K*BV030M4A*	4GE-30	-	253,880	234,400	215,300	196,640	178,820	162,270	145,720	130,900	116,080	102,920	89,750
	K*BV035M4A*	6HE-35	-	333,840	307,250	281,300	256,220	232,280	210,040	187,800	168,370	148,940	131,710	114,470
	K*BV040M4A*	6GE-40	-	368,730	340,330	312,730	286,000	260,390	236,390	212,380	190,700	169,020	150,220	131,410
	K*BV050M4A*	6FE-50	-	443,430	410,670	378,430	346,850	316,460	287,930	259,400	233,460	207,510	184,220	160,930
110°F Ambient	K*BV015M4A*	4NE-20	-	-	140,080	127,840	116,070	104,910	94,380	83,840	74,600	65,360	56,950	48,530
	K*BV020M4A*	4JE-22	-	-	162,080	147,990	134,330	121,000	109,070	97,130	86,170	75,210	65,810	56,400
	K*BV025M4A*	4HE-25	-	-	185,700	170,150	155,090	140,490	126,990	113,480	101,390	89,290	78,660	68,030
	K*BV030M4A*	4GE-30	-	-	213,410	195,680	178,610	161,730	146,580	131,420	117,720	104,020	91,690	79,360
	K*BV035M4A*	6HE-35	-	-	280,420	255,820	233,190	210,770	190,050	169,330	151,210	133,090	117,080	101,060
	K*BV040M4A*	6GE-40	-	-	309,690	284,310	259,900	235,990	213,860	191,720	171,590	151,450	133,590	115,720
	K*BV050M4A*	6FE-50	-	-	373,500	343,170	314,620	286,730	260,390	234,040	210,230	186,410	164,680	142,940

Head fan required Additional Compressor Cooling Required

* Each asterisk represents a variable character based upon model and voltage ordered. See page 3 for nomenclature.

All capacities are calculated at 65°F return gas temperature and dew point values.

‡ Multiply capacity by .83 when used with 50 Hz power.

CAPACITY DATA (BTUH)

MEDIUM TEMPERATURE R454C BITZER // SINGLE COMPRESSOR // 60 HZ‡

	Model No.	Comp. Model No.	Suction Temperature (°F)											
			45°	40°	35°	30°	25°	20°	15°	10°	5°	0°	-5°	-10°
90°F Ambient	K*BV015M4A*	4NE-20	188,490	172,080	156,200	140,940	127,150	113,750	101,760	89,760	79,610	69,460	60,630	51,800
	K*BV020M4A*	4JE-22	216,970	197,700	179,390	162,330	146,160	131,020	117,280	103,530	91,840	80,140	69,930	59,710
	K*BV025M4A*	4HE-25	247,020	226,250	206,190	187,100	168,980	151,960	136,610	121,250	107,860	94,470	82,940	71,410
	K*BV030M4A*	4GE-30	284,450	260,590	237,520	215,820	194,940	175,510	157,790	140,070	124,790	109,510	96,150	82,790
	K*BV035M4A*	6HE-35	373,250	340,830	309,370	280,360	252,720	226,810	203,410	180,010	160,100	140,190	122,910	105,630
	K*BV040M4A*	6GE-40	411,310	377,260	344,190	313,070	283,060	255,180	229,460	203,740	181,970	160,200	140,960	121,720
	K*BV050M4A*	6FE-50	495,570	455,600	417,030	379,820	344,050	310,850	280,290	249,720	222,460	195,200	172,330	149,450
95°F Ambient	K*BV015M4A*	4NE-20	180,580	164,400	149,690	134,820	121,340	108,650	97,040	85,420	75,510	65,590	57,420	49,240
	K*BV020M4A*	4JE-22	208,330	189,600	172,280	155,460	139,860	125,300	112,000	98,700	87,440	76,180	66,390	56,590
	K*BV025M4A*	4HE-25	236,890	216,710	197,440	179,300	161,870	145,510	130,490	115,470	102,670	89,870	78,790	67,710
	K*BV030M4A*	4GE-30	272,480	249,590	227,140	206,120	186,400	167,880	151,140	134,390	119,350	104,300	91,600	78,890
	K*BV035M4A*	6HE-35	358,060	326,650	296,940	268,810	242,040	217,300	194,760	172,210	153,030	133,850	117,380	100,900
	K*BV040M4A*	6GE-40	393,780	360,980	329,390	299,810	271,370	243,990	219,320	194,640	173,540	152,440	133,960	115,480
	K*BV050M4A*	6FE-50	474,290	435,990	398,570	363,480	329,160	297,260	267,740	238,220	212,400	186,570	164,070	141,560
100°F Ambient	K*BV015M4A*	4NE-20	-	157,260	142,890	128,770	115,990	103,660	92,530	81,390	71,920	62,440	54,440	46,440
	K*BV020M4A*	4JE-22	-	181,730	164,730	148,610	133,630	119,470	106,630	93,790	82,860	71,930	62,510	53,080
	K*BV025M4A*	4HE-25	-	207,530	189,030	171,270	154,470	138,800	124,610	110,410	97,950	85,480	74,680	63,880
	K*BV030M4A*	4GE-30	-	238,340	217,110	197,210	178,050	160,350	143,950	127,550	113,310	99,070	86,820	74,570
	K*BV035M4A*	6HE-35	-	312,700	284,340	256,720	231,500	207,470	185,780	164,080	145,260	126,430	110,760	95,090
	K*BV040M4A*	6GE-40	-	345,960	315,320	286,230	258,790	232,800	209,100	185,400	165,140	144,880	127,300	109,710
	K*BV050M4A*	6FE-50	-	416,480	381,370	346,870	314,360	283,530	255,110	226,690	202,050	177,400	156,010	134,610
110°F Ambient	K*BV015M4A*	4NE-20	-	-	129,570	116,970	104,740	93,420	83,160	72,900	64,170	55,440	48,060	40,670
	K*BV020M4A*	4JE-22	-	-	149,660	134,770	120,650	107,850	96,040	84,230	73,910	63,590	55,120	46,640
	K*BV025M4A*	4HE-25	-	-	171,500	155,350	139,860	125,190	111,930	98,660	87,190	75,720	65,940	56,150
	K*BV030M4A*	4GE-30	-	-	197,020	178,550	161,170	144,850	129,590	114,320	101,160	88,000	76,610	65,220
	K*BV035M4A*	6HE-35	-	-	258,040	232,920	209,670	187,910	167,640	147,370	130,090	112,800	98,640	84,480
	K*BV040M4A*	6GE-40	-	-	286,130	259,300	234,030	210,490	188,760	167,020	148,090	129,150	112,890	96,620
	K*BV050M4A*	6FE-50	-	-	345,450	314,470	284,430	256,230	229,980	203,730	181,470	159,210	139,050	118,880

Head fan required Additional Compressor Cooling Required

* Each asterisk represents a variable character based upon model and voltage ordered. See page 3 for nomenclature.

All capacities are calculated at 65°F return gas temperature and dew point values.

‡ Multiply capacity by .83 when used with 50 Hz power.

CAPACITY DATA (BTUH)

MEDIUM TEMPERATURE R455A BITZER // SINGLE COMPRESSOR // 60 HZ‡

	Model No.	Comp. Model No.	Suction Temperature (°F)											
			45°	40°	35°	30°	25°	20°	15°	10°	5°	0°	-5°	-10°
90°F Ambient	K*BV015M4A*	4NE-20	195,970	178,890	162,520	146,960	132,140	118,280	105,480	92,670	81,870	71,070	61,880	52,680
	K*BV020M4A*	4JE-22	225,910	206,050	187,010	168,880	152,070	136,010	121,450	106,890	94,270	81,650	71,070	60,480
	K*BV025M4A*	4HE-25	256,920	235,010	214,290	194,370	175,540	157,630	141,520	125,410	111,190	96,960	85,010	73,050
	K*BV030M4A*	4GE-30	295,050	270,040	246,220	224,070	202,450	182,050	163,440	144,820	128,580	112,340	98,490	84,630
	K*BV035M4A*	6HE-35	388,690	354,520	322,000	291,350	262,400	235,210	210,820	186,430	165,240	144,040	125,910	107,780
	K*BV040M4A*	6GE-40	426,930	391,670	356,100	324,340	292,930	263,410	236,990	210,560	187,270	163,980	143,960	123,940
	K*BV050M4A*	6FE-50	513,350	472,060	431,750	393,040	356,130	321,550	289,740	257,920	230,060	202,200	177,600	152,990
95°F Ambient	K*BV015M4A*	4NE-20	187,710	171,530	155,370	140,410	126,070	112,640	100,630	88,610	78,180	67,750	58,990	50,220
	K*BV020M4A*	4JE-22	216,910	197,310	179,150	161,260	144,340	129,390	115,560	101,720	89,570	77,420	67,300	57,180
	K*BV025M4A*	4HE-25	246,190	225,130	205,190	185,790	166,900	150,700	135,010	119,310	105,770	92,220	80,640	69,050
	K*BV030M4A*	4GE-30	282,580	258,430	235,790	214,230	193,480	173,920	155,890	137,860	122,180	106,490	93,210	79,930
	K*BV035M4A*	6HE-35	372,340	339,440	307,900	278,710	250,200	225,090	201,330	177,560	156,910	136,260	119,040	101,810
	K*BV040M4A*	6GE-40	409,030	374,390	341,150	309,950	280,120	252,240	226,480	200,720	178,100	155,480	136,380	117,270
	K*BV050M4A*	6FE-50	491,060	450,850	412,810	375,880	340,910	306,590	276,310	246,020	219,210	192,390	168,580	144,770
100°F Ambient	K*BV015M4A*	4NE-20	-	163,470	148,520	134,120	120,130	107,010	95,450	83,880	73,860	63,840	55,480	47,120
	K*BV020M4A*	4JE-22	-	188,710	171,250	154,230	137,950	123,320	109,810	96,290	84,650	73,010	63,290	53,560
	K*BV025M4A*	4HE-25	-	215,350	195,700	177,450	160,130	143,640	128,550	113,450	100,300	87,140	75,930	64,710
	K*BV030M4A*	4GE-30	-	246,820	225,180	204,380	184,320	164,940	147,900	130,860	115,850	100,830	87,930	75,030
	K*BV035M4A*	6HE-35	-	324,900	295,170	266,750	239,260	214,610	191,750	168,890	148,940	128,990	112,340	95,680
	K*BV040M4A*	6GE-40	-	357,520	325,410	295,310	267,350	239,750	215,260	190,760	169,010	147,260	128,740	110,220
	K*BV050M4A*	6FE-50	-	430,640	394,150	358,100	325,940	293,070	263,520	233,960	207,560	181,150	158,760	136,370
110°F Ambient	K*BV015M4A*	4NE-20	-	-	134,290	120,740	107,920	95,980	85,410	74,830	65,360	55,890	48,250	40,600
	K*BV020M4A*	4JE-22	-	-	154,560	139,290	124,750	110,410	97,990	85,560	74,760	63,950	55,000	46,040
	K*BV025M4A*	4HE-25	-	-	177,550	160,260	144,220	129,240	115,180	101,110	88,850	76,580	66,340	56,100
	K*BV030M4A*	4GE-30	-	-	203,480	184,480	165,930	148,100	132,340	116,570	102,660	88,750	77,080	65,400
	K*BV035M4A*	6HE-35	-	-	267,730	241,150	216,340	193,120	171,960	150,790	132,180	113,560	98,030	82,500
	K*BV040M4A*	6GE-40	-	-	294,390	266,760	239,540	215,210	192,620	170,030	149,790	129,540	112,400	95,260
	K*BV050M4A*	6FE-50	-	-	355,910	323,330	292,180	263,860	236,380	208,900	184,700	160,490	139,260	118,030

Head fan required Additional Compressor Cooling Required

* Each asterisk represents a variable character based upon model and voltage ordered. See page 3 for nomenclature.
All capacities are calculated at 65°F return gas temperature and dew point values.
‡ Multiply capacity by .83 when used with 50 Hz power.

CAPACITY DATA (BTUH)

MEDIUM TEMPERATURE R404A BITZER // SINGLE COMPRESSOR // 60 HZ‡

	Model No.	Comp. Model No.	Suction Temperature (°F)											
			45°	40°	35°	30°	25°	20°	15°	10°	5°	0°	-5°	-10°
90°F Ambient	K*BV015M4A*	4NE-20	239,500	220,700	202,000	183,600	167,900	152,200	138,050	123,900	111,250	98,600	87,400	76,200
	K*BV020M4A*	4JE-22	258,600	240,100	220,500	201,300	184,600	168,500	152,850	137,200	123,700	110,200	97,950	85,700
	K*BV025M4A*	4HE-25	292,500	271,900	250,600	229,300	210,700	192,400	175,500	158,600	143,300	128,000	114,300	100,600
	K*BV030M4A*	4GE-30	343,600	318,800	294,200	269,200	247,600	227,400	206,950	186,500	168,550	150,600	134,400	118,200
	K*BV035M4A*	6HE-35	447,700	415,800	382,200	349,500	321,100	292,600	266,450	240,300	217,250	194,200	173,000	151,800
	K*BV040M4A*	6GE-40	491,700	457,200	421,200	386,900	356,500	327,200	298,200	269,200	243,550	217,900	194,600	171,300
	K*BV050M4A*	6FE-50	566,600	529,900	489,500	451,400	417,700	384,300	351,250	318,200	288,850	259,500	232,350	205,200
95°F Ambient	K*BV015M4A*	4NE-20	227,800	210,600	192,500	174,900	159,400	144,300	130,800	117,300	105,100	92,900	82,100	71,300
	K*BV020M4A*	4JE-22	247,800	229,400	210,100	191,600	175,500	160,600	145,150	129,700	116,800	103,900	91,950	80,000
	K*BV025M4A*	4HE-25	279,200	259,300	238,500	218,200	200,300	182,700	166,500	150,300	135,950	121,600	108,050	94,500
	K*BV030M4A*	4GE-30	324,600	301,600	276,500	253,800	233,300	213,000	194,050	175,100	158,000	140,900	125,650	110,400
	K*BV035M4A*	6HE-35	424,200	393,000	361,200	329,600	302,100	276,700	251,100	225,500	203,300	181,100	160,900	140,700
	K*BV040M4A*	6GE-40	464,000	432,000	396,900	363,800	335,200	306,600	279,500	252,400	228,450	204,500	182,250	160,000
	K*BV050M4A*	6FE-50	539,900	504,200	465,900	429,100	396,200	363,200	332,400	301,600	273,400	245,200	219,350	193,500
100°F Ambient	K*BV015M4A*	4NE-20	–	200,600	182,800	165,900	151,100	137,200	123,900	110,600	99,000	87,400	77,200	67,000
	K*BV020M4A*	4JE-22	–	218,100	199,700	181,800	166,200	151,400	137,200	123,000	110,300	97,600	86,350	75,100
	K*BV025M4A*	4HE-25	–	246,700	226,300	206,800	190,000	173,100	157,800	142,500	128,250	114,000	101,350	88,700
	K*BV030M4A*	4GE-30	–	286,900	262,900	240,700	221,000	201,600	183,650	165,700	149,300	132,900	118,350	103,800
	K*BV035M4A*	6HE-35	–	374,500	343,200	313,000	286,800	260,700	237,000	213,300	191,850	170,400	151,300	132,200
	K*BV040M4A*	6GE-40	–	410,200	377,500	345,100	317,800	290,200	264,350	238,500	215,300	192,100	171,350	150,600
	K*BV050M4A*	6FE-50	–	478,900	441,800	406,600	374,800	343,600	314,450	285,300	258,150	231,000	206,400	181,800
110°F Ambient	K*BV015M4A*	4NE-20	–	–	164,300	149,000	135,100	121,900	109,800	97,700	87,100	76,500	67,250	58,000
	K*BV020M4A*	4JE-22	–	–	179,200	163,000	148,600	134,400	121,450	108,500	96,850	85,200	74,950	64,700
	K*BV025M4A*	4HE-25	–	–	202,500	185,700	169,700	153,100	139,400	125,700	112,950	100,200	88,550	76,900
	K*BV030M4A*	4GE-30	–	–	235,000	215,300	197,300	178,800	163,000	147,200	132,300	117,400	104,250	91,100
	K*BV035M4A*	6HE-35	–	–	308,200	280,500	256,900	232,800	210,800	188,800	169,200	149,600	132,200	114,800
	K*BV040M4A*	6GE-40	–	–	337,100	308,400	282,900	257,700	234,450	211,200	190,000	168,800	149,850	130,900
	K*BV050M4A*	6FE-50	–	–	395,100	362,700	333,800	305,400	278,650	251,900	227,450	203,000	180,600	158,200

* Each asterisk represents a variable character based upon model and voltage ordered. See page 3 for nomenclature.

All capacities are calculated at 65°F return gas temperature and dew point values.

‡ Multiply capacity by .83 when used with 50 Hz power.

CAPACITY DATA (BTUH)

MEDIUM TEMPERATURE R407A, R407F BITZER // SINGLE COMPRESSOR // 60 HZ‡

	Model No.	Comp. Model No.	Suction Temperature (°F)											
			45°	40°	35°	30°	25°	20°	15°	10°	5°	0°	-5°	-10°
90°F Ambient	K*BV015M4A*	4NE-20	211,700	191,500	175,500	160,300	146,100	133,000	119,750	106,500	94,750	83,000	73,100	63,200
	K*BV020M4A*	4JE-22	228,800	207,300	190,300	173,800	158,800	144,800	130,350	115,900	103,000	90,100	79,000	67,900
	K*BV025M4A*	4HE-25	279,500	255,100	231,300	211,100	192,400	174,900	157,200	139,500	123,800	108,100	94,300	80,500
	K*BV030M4A*	4GE-30	324,900	297,100	269,800	246,800	221,500	203,900	184,300	164,700	146,700	128,700	113,050	97,400
	K*BV035M4A*	6HE-35	428,600	390,700	354,700	323,900	294,500	266,600	240,700	214,800	190,750	166,700	146,600	126,500
	K*BV040M4A*	6GE-40	480,600	439,300	398,700	365,300	333,100	301,900	273,100	244,300	217,550	190,800	167,950	145,100
	K*BV050M4A*	6FE-50	557,100	510,400	464,800	426,200	389,800	353,300	319,950	286,600	255,950	225,300	198,300	171,300
95°F Ambient	K*BV015M4A*	4NE-20	203,400	183,800	168,300	153,500	139,800	127,000	114,400	101,800	90,250	78,700	69,150	59,600
	K*BV020M4A*	4JE-22	219,800	198,900	182,400	166,600	151,800	138,000	124,000	110,000	97,600	85,200	74,500	63,800
	K*BV025M4A*	4HE-25	268,600	242,500	221,700	202,500	183,700	167,000	149,800	132,600	117,400	102,200	89,100	76,000
	K*BV030M4A*	4GE-30	312,500	282,900	259,200	235,800	215,500	196,400	177,050	157,700	139,900	122,100	106,700	91,300
	K*BV035M4A*	6HE-35	411,300	375,100	339,800	310,200	281,700	256,500	230,800	205,100	181,800	158,500	138,600	118,700
	K*BV040M4A*	6GE-40	461,400	421,600	383,100	349,800	319,100	288,900	261,300	233,700	207,400	181,100	158,950	136,800
	K*BV050M4A*	6FE-50	535,500	490,400	446,000	408,500	373,200	340,200	306,750	273,300	243,400	213,500	187,750	162,000
100°F Ambient	K*BV015M4A*	4NE-20	–	176,500	161,200	146,800	133,500	121,100	108,900	96,700	85,500	74,300	65,050	55,800
	K*BV020M4A*	4JE-22	–	190,600	174,600	159,200	144,700	131,400	117,850	104,300	92,350	80,400	70,100	59,800
	K*BV025M4A*	4HE-25	–	232,400	212,400	192,900	175,300	159,000	142,550	126,100	111,200	96,300	83,700	71,100
	K*BV030M4A*	4GE-30	–	271,500	248,500	226,400	206,400	187,500	168,750	150,000	132,850	115,700	101,250	86,800
	K*BV035M4A*	6HE-35	–	356,800	323,100	294,500	267,000	242,400	217,600	192,800	170,400	148,000	129,100	110,200
	K*BV040M4A*	6GE-40	–	405,000	366,800	335,100	304,800	275,200	248,550	221,900	196,650	171,400	150,000	128,600
	K*BV050M4A*	6FE-50	–	473,900	431,200	394,500	360,100	327,900	296,200	264,500	234,500	204,500	179,700	154,900
110°F Ambient	K*BV015M4A*	4NE-20	–	–	146,800	133,300	121,000	109,400	97,750	86,100	75,900	65,700	57,250	48,800
	K*BV020M4A*	4JE-22	–	–	159,100	144,600	131,100	118,600	105,900	93,200	81,950	70,700	61,250	51,800
	K*BV025M4A*	4HE-25	–	–	193,300	175,500	158,900	143,500	127,800	112,100	98,450	84,800	73,250	61,700
	K*BV030M4A*	4GE-30	–	–	227,000	206,600	187,600	170,000	152,050	134,100	118,500	102,900	89,450	76,000
	K*BV035M4A*	6HE-35	–	–	298,000	270,400	245,200	221,500	198,700	175,900	154,400	132,900	115,650	98,400
	K*BV040M4A*	6GE-40	–	–	335,400	305,200	277,800	251,400	225,000	198,600	175,450	152,300	132,750	113,200
	K*BV050M4A*	6FE-50	–	–	390,700	355,800	324,200	294,100	263,950	233,800	206,600	179,400	156,650	133,900

Head fan required

* Each asterisk represents a variable character based upon model and voltage ordered. See page 3 for nomenclature.

All capacities are calculated at 65°F return gas temperature and dew point values.

‡ Multiply capacity by .83 when used with 50 Hz power.

CAPACITY DATA (BTUH)

MEDIUM TEMPERATURE R407C BITZER // SINGLE COMPRESSOR // 60 HZ‡

	Model No.	Comp. Model No.	Suction Temperature (°F)											
			45°	40°	35°	30°	25°	20°	15°	10°	5°	0°	-5°	-10°
90°F Ambient	K*BV015M4A*	4NE-20	203,000	183,600	168,200	153,400	139,900	127,200	114,400	101,600	90,300	79,000	69,300	59,600
	K*BV020M4A*	4JE-22	238,100	217,200	196,000	177,800	161,700	146,600	131,250	115,900	101,950	88,000	76,100	64,200
	K*BV025M4A*	4HE-25	273,400	251,800	226,700	206,600	188,300	170,800	153,400	136,000	120,350	104,700	90,800	76,900
	K*BV030M4A*	4GE-30	324,400	299,100	268,900	246,800	220,900	202,700	183,050	163,400	145,200	127,000	111,400	95,800
	K*BV035M4A*	6HE-35	407,100	368,500	335,500	305,300	278,100	250,600	225,900	201,200	178,500	155,800	137,250	118,700
	K*BV040M4A*	6GE-40	466,700	422,900	386,900	355,500	323,500	293,200	265,200	237,200	212,100	187,000	165,400	143,800
	K*BV050M4A*	6FE-50	538,100	490,900	447,300	409,700	373,200	336,100	305,850	275,600	245,400	215,200	189,350	163,500
95°F Ambient	K*BV015M4A*	4NE-20	195,000	176,200	161,300	146,900	133,900	121,500	109,300	97,100	86,000	74,900	65,550	56,200
	K*BV020M4A*	4JE-22	228,700	208,400	187,900	170,400	154,600	139,700	124,850	110,000	96,600	83,200	71,750	60,300
	K*BV025M4A*	4HE-25	262,700	239,400	217,300	198,200	179,800	163,100	146,200	129,300	114,150	99,000	85,800	72,600
	K*BV030M4A*	4GE-30	312,000	284,800	258,300	235,800	214,900	195,200	175,850	156,500	138,500	120,500	105,150	89,800
	K*BV035M4A*	6HE-35	390,700	353,800	321,400	292,400	266,000	241,100	216,600	192,100	170,100	148,100	129,750	111,400
	K*BV040M4A*	6GE-40	448,100	405,900	371,800	340,400	309,900	280,600	253,750	226,900	202,200	177,500	156,550	135,600
	K*BV050M4A*	6FE-50	517,200	471,700	429,200	392,700	357,300	323,600	293,200	262,800	233,350	203,900	179,250	154,600
100°F Ambient	K*BV015M4A*	4NE-20	–	169,200	154,500	140,500	127,900	115,900	104,050	92,200	81,450	70,700	61,650	52,600
	K*BV020M4A*	4JE-22	–	199,700	179,900	162,800	147,400	133,000	118,650	104,300	91,400	78,500	67,500	56,500
	K*BV025M4A*	4HE-25	–	229,400	208,200	188,800	171,600	155,300	139,150	123,000	108,150	93,300	80,600	67,900
	K*BV030M4A*	4GE-30	–	273,300	247,600	226,400	205,800	186,400	167,650	148,900	131,550	114,200	99,800	85,400
	K*BV035M4A*	6HE-35	–	336,500	305,600	277,600	252,100	227,800	204,200	180,600	159,450	138,300	120,850	103,400
	K*BV040M4A*	6GE-40	–	389,900	356,000	326,100	296,000	267,300	241,350	215,400	191,700	168,000	147,750	127,500
	K*BV050M4A*	6FE-50	–	455,800	415,000	379,200	344,800	311,900	283,100	254,300	224,800	195,300	171,550	147,800
110°F Ambient	K*BV015M4A*	4NE-20	–	–	140,700	127,600	115,900	104,700	93,400	82,100	72,300	62,500	54,250	46,000
	K*BV020M4A*	4JE-22	–	–	163,900	147,900	133,500	120,100	106,650	93,200	81,100	69,000	59,000	49,000
	K*BV025M4A*	4HE-25	–	–	189,500	171,800	155,500	140,100	124,700	109,300	95,700	82,100	70,500	58,900
	K*BV030M4A*	4GE-30	–	–	226,200	206,600	187,100	169,000	151,050	133,100	117,350	101,600	88,200	74,800
	K*BV035M4A*	6HE-35	–	–	281,900	254,900	231,500	208,200	186,500	164,800	144,500	124,200	108,250	92,300
	K*BV040M4A*	6GE-40	–	–	325,500	297,000	269,800	244,200	218,500	192,800	171,050	149,300	130,750	112,200
	K*BV050M4A*	6FE-50	–	–	376,000	342,000	310,400	279,700	252,250	224,800	198,050	171,300	149,550	127,800

Head fan required

* Each asterisk represents a variable character based upon model and voltage ordered. See page 3 for nomenclature.

All capacities are calculated at 65°F return gas temperature and dew point values.

‡ Multiply capacity by .83 when used with 50 Hz power.

CAPACITY DATA (BTUH)

MEDIUM TEMPERATURE R448A, R449A/B BITZER// SINGLE COMPRESSOR // 60 HZ‡

	Model No.	Comp. Model No.	Suction Temperature (°F)											
			45°	40°	35°	30°	25°	20°	15°	10°	5°	0°	-5°	-10°
90°F Ambient	K*BV015M4A*	4NE-20	216,900	198,300	179,900	164,800	150,000	136,600	123,150	109,700	97,900	86,100	76,250	66,400
	K*BV020M4A*	4JE-22	251,100	229,700	208,100	190,500	174,000	158,500	143,250	128,000	113,950	99,900	88,050	76,200
	K*BV025M4A*	4HE-25	285,100	264,100	238,900	218,600	200,900	183,200	166,300	149,400	133,750	118,100	104,550	91,000
	K*BV030M4A*	4GE-30	329,600	305,300	276,000	254,800	228,800	211,100	191,850	172,600	155,000	137,400	122,450	107,500
	K*BV035M4A*	6HE-35	431,300	393,900	359,800	329,400	300,600	272,300	247,150	222,000	198,550	175,100	155,700	136,300
	K*BV040M4A*	6GE-40	476,600	437,400	398,400	368,500	336,900	306,900	279,200	251,500	226,050	200,600	178,950	157,300
	K*BV050M4A*	6FE-50	557,100	513,500	470,300	435,100	400,600	365,600	334,050	302,500	272,400	242,300	215,600	188,900
95°F Ambient	K*BV015M4A*	4NE-20	208,400	190,300	172,500	157,800	143,500	130,400	117,650	104,900	93,250	81,600	72,100	62,600
	K*BV020M4A*	4JE-22	241,200	220,400	199,500	182,600	166,300	151,100	136,300	121,500	108,000	94,500	83,050	71,600
	K*BV025M4A*	4HE-25	274,000	251,100	229,000	209,700	191,800	174,900	158,450	142,000	126,850	111,700	98,800	85,900
	K*BV030M4A*	4GE-30	317,000	290,700	265,200	243,400	222,600	203,300	184,300	165,300	147,850	130,400	115,600	100,800
	K*BV035M4A*	6HE-35	413,900	378,200	344,700	315,500	287,500	262,000	237,000	212,000	189,250	166,500	147,200	127,900
	K*BV040M4A*	6GE-40	457,600	419,800	382,800	352,900	322,700	293,700	267,150	240,600	215,500	190,400	169,350	148,300
	K*BV050M4A*	6FE-50	535,500	493,400	451,300	417,000	383,500	352,000	320,250	288,500	259,050	229,600	204,100	178,600
100°F Ambient	K*BV015M4A*	4NE-20	–	182,700	165,200	150,900	137,000	124,300	111,950	99,600	88,300	77,000	67,800	58,600
	K*BV020M4A*	4JE-22	–	211,200	191,000	174,500	158,500	143,900	129,550	115,200	102,200	89,200	78,150	67,100
	K*BV025M4A*	4HE-25	–	240,600	219,400	199,800	183,000	166,500	150,750	135,000	120,150	105,300	92,850	80,400
	K*BV030M4A*	4GE-30	–	279,000	254,300	233,700	213,200	194,100	175,650	157,200	140,400	123,600	109,700	95,800
	K*BV035M4A*	6HE-35	–	359,700	327,800	299,500	272,500	247,600	223,450	199,300	177,400	155,500	137,100	118,700
	K*BV040M4A*	6GE-40	–	403,300	366,500	338,100	308,200	279,800	254,150	228,500	204,350	180,200	159,800	139,400
	K*BV050M4A*	6FE-50	–	476,800	436,300	402,700	370,000	339,300	309,250	279,200	249,550	219,900	195,350	170,800
110°F Ambient	K*BV015M4A*	4NE-20	–	–	150,500	137,000	124,200	112,300	100,500	88,700	78,400	68,100	59,700	51,300
	K*BV020M4A*	4JE-22	–	–	174,000	158,500	143,600	129,900	116,400	102,900	90,650	78,400	68,250	58,100
	K*BV025M4A*	4HE-25	–	–	199,700	181,700	165,900	150,300	135,150	120,000	106,350	92,700	81,200	69,700
	K*BV030M4A*	4GE-30	–	–	232,300	213,300	193,800	176,000	158,300	140,600	125,250	109,900	96,900	83,900
	K*BV035M4A*	6HE-35	–	–	302,300	275,000	250,200	226,200	204,000	181,800	160,700	139,600	122,800	106,000
	K*BV040M4A*	6GE-40	–	–	335,100	307,900	280,900	255,600	230,050	204,500	182,300	160,100	141,400	122,700
	K*BV050M4A*	6FE-50	–	–	395,300	363,200	333,100	304,300	275,550	246,800	219,850	192,900	170,250	147,600

Head fan required

* Each asterisk represents a variable character based upon model and voltage ordered. See page 3 for nomenclature.

All capacities are calculated at 65°F return gas temperature and dew point values.

‡ Multiply capacity by .83 when used with 50 Hz power.

CAPACITY DATA (BTUH)

MEDIUM TEMPERATURE R454A BITZER // DUAL COMPRESSOR // 60 HZ‡

	Model No.	Comp. Model No.	Suction Temperature (°F)											
			45°	40°	35°	30°	25°	20°	15°	10°	5°	0°	-5°	-10°
90°F Ambient	K*BD030M4A*	(2) 4NE-20	396,960	365,780	335,760	307,020	279,620	253,920	229,610	205,300	183,630	161,960	143,100	124,240
	K*BD040M4A*	(2) 4JE-22	457,160	420,940	386,940	354,160	322,840	292,680	264,630	236,580	212,250	187,920	165,940	143,960
	K*BD050M4A*	(2) 4HE-25	520,280	480,180	443,080	407,700	372,200	339,040	307,560	276,080	248,910	221,740	196,660	171,580
	K*BD060M4A*	(2) 4GE-30	598,820	553,320	510,740	469,460	429,440	391,100	355,260	319,420	287,370	255,320	226,880	198,440
	K*BD070M4A*	(2) 6HE-35	787,560	725,180	668,160	611,960	557,980	506,460	459,150	411,840	369,700	327,560	291,390	255,220
	K*BD080M4A*	(2) 6GE-40	867,660	801,800	742,120	681,780	624,620	569,200	517,540	465,880	420,290	374,700	332,550	290,400
	K*BD100M4A*	(2) 6FE-50	1,043,960	967,200	894,900	824,660	757,280	690,940	629,390	567,840	513,260	458,680	407,990	357,300
95°F Ambient	K*BD030M4A*	(2) 4NE-20	380,660	350,020	322,340	294,200	267,720	242,640	219,260	195,880	174,950	154,020	135,920	117,820
	K*BD040M4A*	(2) 4JE-22	439,040	404,120	371,300	339,580	309,180	280,140	253,010	225,880	202,450	179,020	157,510	136,000
	K*BD050M4A*	(2) 4HE-25	500,100	461,320	425,320	390,820	357,020	324,420	294,220	264,020	236,970	209,920	186,410	162,900
	K*BD060M4A*	(2) 4GE-30	575,460	531,480	489,900	450,000	411,420	374,720	340,100	305,480	274,540	243,600	216,540	189,480
	K*BD070M4A*	(2) 6HE-35	756,440	696,340	641,160	587,540	535,200	485,740	439,840	393,940	353,270	312,600	277,140	241,680
	K*BD080M4A*	(2) 6GE-40	833,560	770,100	711,140	653,560	598,520	544,760	494,860	444,960	400,300	355,640	316,460	277,280
	K*BD100M4A*	(2) 6FE-50	1,000,060	925,940	857,580	790,920	725,580	662,080	602,910	543,740	489,710	435,680	387,430	339,180
100°F Ambient	K*BD030M4A*	(2) 4NE-20	-	336,520	308,000	281,920	255,700	231,980	209,370	186,760	166,750	146,740	129,750	112,760
	K*BD040M4A*	(2) 4JE-22	-	387,460	355,780	325,560	296,020	267,620	241,430	215,240	192,310	169,380	149,200	129,020
	K*BD050M4A*	(2) 4HE-25	-	442,000	407,860	373,880	341,420	309,980	280,890	251,800	225,700	199,600	176,180	152,760
	K*BD060M4A*	(2) 4GE-30	-	507,760	468,800	430,600	393,280	357,640	324,540	291,440	261,800	232,160	205,830	179,500
	K*BD070M4A*	(2) 6HE-35	-	667,680	614,500	562,600	512,440	464,560	420,080	375,600	336,740	297,880	263,410	228,940
	K*BD080M4A*	(2) 6GE-40	-	737,460	680,660	625,460	572,000	520,780	472,770	424,760	381,400	338,040	300,430	262,820
	K*BD100M4A*	(2) 6FE-50	-	886,860	821,340	756,860	693,700	632,920	575,860	518,800	466,910	415,020	368,440	321,860
110°F Ambient	K*BD030M4A*	(2) 4NE-20	-	-	280,160	255,680	232,140	209,820	188,750	167,680	149,200	130,720	113,890	97,060
	K*BD040M4A*	(2) 4JE-22	-	-	324,160	295,980	268,660	242,000	218,130	194,260	172,340	150,420	131,610	112,800
	K*BD050M4A*	(2) 4HE-25	-	-	371,400	340,300	310,180	280,980	253,970	226,960	202,770	178,580	157,320	136,060
	K*BD060M4A*	(2) 4GE-30	-	-	426,820	391,360	357,220	323,460	293,150	262,840	235,440	208,040	183,380	158,720
	K*BD070M4A*	(2) 6HE-35	-	-	560,840	511,640	466,380	421,540	380,100	338,660	302,420	266,180	234,150	202,120
	K*BD080M4A*	(2) 6GE-40	-	-	619,380	568,620	519,800	471,980	427,710	383,440	343,170	302,900	267,170	231,440
	K*BD100M4A*	(2) 6FE-50	-	-	747,000	686,340	629,240	573,460	520,770	468,080	420,450	372,820	329,350	285,880

Head fan required Additional Compressor Cooling Required

* Each asterisk represents a variable character based upon model and voltage ordered. See page 3 for nomenclature.

All capacities are calculated at 65°F return gas temperature and dew point values.

‡ Multiply capacity by .83 when used with 50 Hz power.

CAPACITY DATA (BTUH)

MEDIUM TEMPERATURE R454C BITZER // DUAL COMPRESSOR // 60 HZ‡

	Model No.	Comp. Model No.	Suction Temperature (°F)											
			45°	40°	35°	30°	25°	20°	15°	10°	5°	0°	-5°	-10°
90°F Ambient	K*BD030M4A*	(2) 4NE-20	376,980	344,160	312,400	281,880	254,300	227,500	203,510	179,520	159,220	138,920	121,260	103,600
	K*BD040M4A*	(2) 4JE-22	433,940	395,400	358,780	324,660	292,320	262,040	234,550	207,060	183,670	160,280	139,850	119,420
	K*BD050M4A*	(2) 4HE-25	494,040	452,500	412,380	374,200	337,960	303,920	273,210	242,500	215,720	188,940	165,880	142,820
	K*BD060M4A*	(2) 4GE-30	568,900	521,180	475,040	431,640	389,880	351,020	315,580	280,140	249,580	219,020	192,300	165,580
	K*BD070M4A*	(2) 6HE-35	746,500	681,660	618,740	560,720	505,440	453,620	406,820	360,020	320,200	280,380	245,820	211,260
	K*BD080M4A*	(2) 6GE-40	822,620	754,520	688,380	626,140	566,120	510,360	458,920	407,480	363,940	320,400	281,920	243,440
	K*BD100M4A*	(2) 6FE-50	991,140	911,200	834,060	759,640	688,100	621,700	560,570	499,440	444,920	390,400	344,650	298,900
95°F Ambient	K*BD030M4A*	(2) 4NE-20	361,160	328,800	299,380	269,640	242,680	217,300	194,070	170,840	151,010	131,180	114,830	98,480
	K*BD040M4A*	(2) 4JE-22	416,660	379,200	344,560	310,920	279,720	250,600	224,000	197,400	174,880	152,360	132,770	113,180
	K*BD050M4A*	(2) 4HE-25	473,780	433,420	394,880	358,600	323,740	291,020	260,980	230,940	205,340	179,740	157,580	135,420
	K*BD060M4A*	(2) 4GE-30	544,960	499,180	454,280	412,240	372,800	335,760	302,270	268,780	238,690	208,600	183,190	157,780
	K*BD070M4A*	(2) 6HE-35	716,120	653,300	593,880	537,620	484,080	434,600	389,510	344,420	306,060	267,700	234,750	201,800
	K*BD080M4A*	(2) 6GE-40	787,560	721,960	658,780	599,620	542,740	487,980	438,630	389,280	347,080	304,880	267,920	230,960
	K*BD100M4A*	(2) 6FE-50	948,580	871,980	797,140	726,960	658,320	594,520	535,480	476,440	424,790	373,140	328,130	283,120
100°F Ambient	K*BD030M4A*	(2) 4NE-20	-	314,520	285,780	257,540	231,980	207,320	185,050	162,780	143,830	124,880	108,880	92,880
	K*BD040M4A*	(2) 4JE-22	-	363,460	329,460	297,220	267,260	238,940	213,260	187,580	165,720	143,860	125,010	106,160
	K*BD050M4A*	(2) 4HE-25	-	415,060	378,060	342,540	308,940	277,600	249,210	220,820	195,890	170,960	149,360	127,760
	K*BD060M4A*	(2) 4GE-30	-	476,680	434,220	394,420	356,100	320,700	287,900	255,100	226,620	198,140	173,640	149,140
	K*BD070M4A*	(2) 6HE-35	-	625,400	568,680	513,440	463,000	414,940	371,550	328,160	290,510	252,860	221,520	190,180
	K*BD080M4A*	(2) 6GE-40	-	691,920	630,640	572,460	517,580	465,600	418,200	370,800	330,280	289,760	254,590	219,420
	K*BD100M4A*	(2) 6FE-50	-	832,960	762,740	693,740	628,720	567,060	510,220	453,380	404,090	354,800	312,010	269,220
110°F Ambient	K*BD030M4A*	(2) 4NE-20	-	-	259,140	233,940	209,480	186,840	166,320	145,800	128,340	110,880	96,110	81,340
	K*BD040M4A*	(2) 4JE-22	-	-	299,320	269,540	241,300	215,700	192,080	168,460	147,820	127,180	110,230	93,280
	K*BD050M4A*	(2) 4HE-25	-	-	343,000	310,700	279,720	250,380	223,850	197,320	174,380	151,440	131,870	112,300
	K*BD060M4A*	(2) 4GE-30	-	-	394,040	357,100	322,340	289,700	259,170	228,640	202,320	176,000	153,220	130,440
	K*BD070M4A*	(2) 6HE-35	-	-	516,080	465,840	419,340	375,820	335,280	294,740	260,170	225,600	197,280	168,960
	K*BD080M4A*	(2) 6GE-40	-	-	572,260	518,600	468,060	420,980	377,510	334,040	296,170	258,300	225,770	193,240
	K*BD100M4A*	(2) 6FE-50	-	-	690,900	628,940	568,860	512,460	459,960	407,460	362,940	318,420	278,090	237,760

Head fan required Additional Compressor Cooling Required

* Each asterisk represents a variable character based upon model and voltage ordered. See page3 for nomenclature.

All capacities are calculated at 65°F return gas temperature and dew point values.

‡ Multiply capacity by .83 when used with 50 Hz power.

CAPACITY DATA (BTUH)

MEDIUM TEMPERATURE R455A BITZER // DUAL COMPRESSOR // 60 HZ‡

	Model No.	Comp. Model No.	Suction Temperature (°F)											
			45°	40°	35°	30°	25°	20°	15°	10°	5°	0°	-5°	-10°
90°F Ambient	K*BD030M4A*	(2) 4NE-20	391,940	357,780	325,040	293,920	264,280	236,560	210,950	185,340	163,740	142,140	123,750	105,360
	K*BD040M4A*	(2) 4JE-22	451,820	412,100	374,020	337,760	304,140	272,020	242,900	213,780	188,540	163,300	142,130	120,960
	K*BD050M4A*	(2) 4HE-25	513,840	470,020	428,580	388,740	351,080	315,260	283,040	250,820	222,370	193,920	170,010	146,100
	K*BD060M4A*	(2) 4GE-30	590,100	540,080	492,440	448,140	404,900	364,100	326,870	289,640	257,160	224,680	196,970	169,260
	K*BD070M4A*	(2) 6HE-35	777,380	709,040	644,000	582,700	524,800	470,420	421,640	372,860	330,470	288,080	251,820	215,560
	K*BD080M4A*	(2) 6GE-40	853,860	783,340	712,200	648,680	585,860	526,820	473,970	421,120	374,540	327,960	287,920	247,880
	K*BD100M4A*	(2) 6FE-50	1,026,700	944,120	863,500	786,080	712,260	643,100	579,470	515,840	460,120	404,400	355,190	305,980
95°F Ambient	K*BD030M4A*	(2) 4NE-20	375,420	343,060	310,740	280,820	252,140	225,280	201,250	177,220	156,360	135,500	117,970	100,440
	K*BD040M4A*	(2) 4JE-22	433,820	394,620	358,300	322,520	288,680	258,780	231,110	203,440	179,140	154,840	134,600	114,360
	K*BD050M4A*	(2) 4HE-25	492,380	450,260	410,380	371,580	333,800	301,400	270,010	238,620	211,530	184,440	161,270	138,100
	K*BD060M4A*	(2) 4GE-30	565,160	516,860	471,580	428,460	386,960	347,840	311,780	275,720	244,350	212,980	186,420	159,860
	K*BD070M4A*	(2) 6HE-35	744,680	678,880	615,800	557,420	500,400	450,180	402,650	355,120	313,820	272,520	238,070	203,620
	K*BD080M4A*	(2) 6GE-40	818,060	748,780	682,300	619,900	560,240	504,480	452,960	401,440	356,200	310,960	272,750	234,540
	K*BD100M4A*	(2) 6FE-50	982,120	901,700	825,620	751,760	681,820	613,180	552,610	492,040	438,410	384,780	337,160	289,540
100°F Ambient	K*BD030M4A*	(2) 4NE-20	-	326,940	297,040	268,240	240,260	214,020	190,890	167,760	147,720	127,680	110,960	94,240
	K*BD040M4A*	(2) 4JE-22	-	377,420	342,500	308,460	275,900	246,640	219,610	192,580	169,300	146,020	126,570	107,120
	K*BD050M4A*	(2) 4HE-25	-	430,700	391,400	354,900	320,260	287,280	257,090	226,900	200,590	174,280	151,850	129,420
	K*BD060M4A*	(2) 4GE-30	-	493,640	450,360	408,760	368,640	329,880	295,800	261,720	231,690	201,660	175,860	150,060
	K*BD070M4A*	(2) 6HE-35	-	649,800	590,340	533,500	478,520	429,220	383,500	337,780	297,880	257,980	224,670	191,360
	K*BD080M4A*	(2) 6GE-40	-	715,040	650,820	590,620	534,700	479,500	430,510	381,520	338,020	294,520	257,480	220,440
	K*BD100M4A*	(2) 6FE-50	-	861,280	788,300	716,200	651,880	586,140	527,030	467,920	415,110	362,300	317,520	272,740
110°F Ambient	K*BD030M4A*	(2) 4NE-20	-	-	268,580	241,480	215,840	191,960	170,810	149,660	130,720	111,780	96,490	81,200
	K*BD040M4A*	(2) 4JE-22	-	-	309,120	278,580	249,500	220,820	195,970	171,120	149,510	127,900	109,990	92,080
	K*BD050M4A*	(2) 4HE-25	-	-	355,100	320,520	288,440	258,480	230,350	202,220	177,690	153,160	132,680	112,200
	K*BD060M4A*	(2) 4GE-30	-	-	406,960	368,960	331,860	296,200	264,670	233,140	205,320	177,500	154,150	130,800
	K*BD070M4A*	(2) 6HE-35	-	-	535,460	482,300	432,680	386,240	343,910	301,580	264,350	227,120	196,060	165,000
	K*BD080M4A*	(2) 6GE-40	-	-	588,780	533,520	479,080	430,420	385,240	340,060	299,570	259,080	224,800	190,520
	K*BD100M4A*	(2) 6FE-50	-	-	711,820	646,660	584,360	527,720	472,760	417,800	369,390	320,980	278,520	236,060

Head fan required Additional Compressor Cooling Required

* Each asterisk represents a variable character based upon model and voltage ordered. See page 3 for nomenclature.

All capacities are calculated at 65°F return gas temperature and dew point values.

‡ Multiply capacity by .83 when used with 50 Hz power.

CAPACITY DATA (BTUH)

MEDIUM TEMPERATURE R404A BITZER // DUAL COMPRESSOR // 60 HZ‡

	Model No.	Comp. Model No.	Suction Temperature (°F)											
			45°	40°	35°	30°	25°	20°	15°	10°	5°	0°	-5°	-10°
90°F Ambient	K*BD030M4A*	(2) 4NE-20	479,000	441,400	404,000	367,200	335,800	304,400	276,100	247,800	222,500	197,200	174,800	152,400
	K*BD040M4A*	(2) 4JE-22	517,200	480,200	441,000	402,600	369,200	337,000	305,700	274,400	247,400	220,400	195,900	171,400
	K*BD050M4A*	(2) 4HE-25	585,000	543,800	501,200	458,600	421,400	384,800	351,000	317,200	286,600	256,000	228,600	201,200
	K*BD060M4A*	(2) 4GE-30	687,200	637,600	588,400	538,400	495,200	454,800	413,900	373,000	337,100	301,200	268,800	236,400
	K*BD070M4A*	(2) 6HE-35	895,400	831,600	764,400	699,000	642,200	585,200	532,900	480,600	434,500	388,400	346,000	303,600
	K*BD080M4A*	(2) 6GE-40	983,400	914,400	842,400	773,800	713,000	654,400	596,400	538,400	487,100	435,800	389,200	342,600
	K*BD100M4A*	(2) 6FE-50	1,133,200	1,059,800	979,000	902,800	835,400	768,600	702,500	636,400	577,700	519,000	464,700	410,400
95°F Ambient	K*BD030M4A*	(2) 4NE-20	455,600	421,200	385,000	349,800	318,800	288,600	261,600	234,600	210,200	185,800	164,200	142,600
	K*BD040M4A*	(2) 4JE-22	495,600	458,800	420,200	383,200	351,000	321,200	290,300	259,400	233,600	207,800	183,900	160,000
	K*BD050M4A*	(2) 4HE-25	558,400	518,600	477,000	436,400	400,600	365,400	333,000	300,600	271,900	243,200	216,100	189,000
	K*BD060M4A*	(2) 4GE-30	649,200	603,200	553,000	507,600	466,600	426,000	388,100	350,200	316,000	281,800	251,300	220,800
	K*BD070M4A*	(2) 6HE-35	848,400	786,000	722,400	659,200	604,200	553,400	502,200	451,000	406,600	362,200	321,800	281,400
	K*BD080M4A*	(2) 6GE-40	928,000	864,000	793,800	727,600	670,400	613,200	559,000	504,800	456,900	409,000	364,500	320,000
	K*BD100M4A*	(2) 6FE-50	1,079,800	1,008,400	931,800	858,200	792,400	726,400	664,800	603,200	546,800	490,400	438,700	387,000
100°F Ambient	K*BD030M4A*	(2) 4NE-20	–	401,200	365,600	331,800	302,200	274,400	247,800	221,200	198,000	174,800	154,400	134,000
	K*BD040M4A*	(2) 4JE-22	–	436,200	399,400	363,600	332,400	302,800	274,400	246,000	220,600	195,200	172,700	150,200
	K*BD050M4A*	(2) 4HE-25	–	493,400	452,600	413,600	380,000	346,200	315,600	285,000	256,500	228,000	202,700	177,400
	K*BD060M4A*	(2) 4GE-30	–	573,800	525,800	481,400	442,000	403,200	367,300	331,400	298,600	265,800	236,700	207,600
	K*BD070M4A*	(2) 6HE-35	–	749,000	686,400	626,000	573,600	521,400	474,000	426,600	383,700	340,800	302,600	264,400
	K*BD080M4A*	(2) 6GE-40	–	820,400	755,000	690,200	635,600	580,400	528,700	477,000	430,600	384,200	342,700	301,200
	K*BD100M4A*	(2) 6FE-50	–	957,800	883,600	813,200	749,600	687,200	628,900	570,600	516,300	462,000	412,800	363,600
110°F Ambient	K*BD030M4A*	(2) 4NE-20	–	–	328,600	298,000	270,200	243,800	219,600	195,400	174,200	153,000	134,500	116,000
	K*BD040M4A*	(2) 4JE-22	–	–	358,400	326,000	297,200	268,800	242,900	217,000	193,700	170,400	149,900	129,400
	K*BD050M4A*	(2) 4HE-25	–	–	405,000	371,400	339,400	306,200	278,800	251,400	225,900	200,400	177,100	153,800
	K*BD060M4A*	(2) 4GE-30	–	–	470,000	430,600	394,600	357,600	326,000	294,400	264,600	234,800	208,500	182,200
	K*BD070M4A*	(2) 6HE-35	–	–	616,400	561,000	513,800	465,600	421,600	377,600	338,400	299,200	264,400	229,600
	K*BD080M4A*	(2) 6GE-40	–	–	674,200	616,800	565,800	515,400	468,900	422,400	380,000	337,600	299,700	261,800
	K*BD100M4A*	(2) 6FE-50	–	–	790,200	725,400	667,600	610,800	557,300	503,800	454,900	406,000	361,200	316,400

* Each asterisk represents a variable character based upon model and voltage ordered. See page 3 for nomenclature.

All capacities are calculated at 65°F return gas temperature and dew point values.

‡ Multiply capacity by .83 when used with 50 Hz power.

CAPACITY DATA (BTUH)

MEDIUM TEMPERATURE R407A, R407F BITZER // DUAL COMPRESSOR // 60 HZ‡

	Model No.	Comp. Model No.	Suction Temperature (°F)											
			45°	40°	35°	30°	25°	20°	15°	10°	5°	0°	-5°	-10°
90°F Ambient	K*BD030M4A*	(2) 4NE-20	423,400	383,000	351,000	320,600	292,200	266,000	239,500	213,000	189,500	166,000	146,200	126,400
	K*BD040M4A*	(2) 4JE-22	457,600	414,600	380,600	347,600	317,600	289,600	260,700	231,800	206,000	180,200	158,000	135,800
	K*BD050M4A*	(2) 4HE-25	559,000	510,200	462,600	422,200	384,800	349,800	314,400	279,000	247,600	216,200	188,600	161,000
	K*BD060M4A*	(2) 4GE-30	649,800	594,200	539,600	493,600	443,000	407,800	368,600	329,400	293,400	257,400	226,100	194,800
	K*BD070M4A*	(2) 6HE-35	857,200	781,400	709,400	647,800	589,000	533,200	481,400	429,600	381,500	333,400	293,200	253,000
	K*BD080M4A*	(2) 6GE-40	961,200	878,600	797,400	730,600	666,200	603,800	546,200	488,600	435,100	381,600	335,900	290,200
	K*BD100M4A*	(2) 6FE-50	1,114,200	1,020,800	929,600	852,400	779,600	706,600	639,900	573,200	511,900	450,600	396,600	342,600
95°F Ambient	K*BD030M4A*	(2) 4NE-20	406,800	367,600	336,600	307,000	279,600	254,000	228,800	203,600	180,500	157,400	138,300	119,200
	K*BD040M4A*	(2) 4JE-22	439,600	397,800	364,800	333,200	303,600	276,000	248,000	220,000	195,200	170,400	149,000	127,600
	K*BD050M4A*	(2) 4HE-25	537,200	485,000	443,400	405,000	367,400	334,000	299,600	265,200	234,800	204,400	178,200	152,000
	K*BD060M4A*	(2) 4GE-30	625,000	565,800	518,400	471,600	431,000	392,800	354,100	315,400	279,800	244,200	213,400	182,600
	K*BD070M4A*	(2) 6HE-35	822,600	750,200	679,600	620,400	563,400	513,000	461,600	410,200	363,600	317,000	277,200	237,400
	K*BD080M4A*	(2) 6GE-40	922,800	843,200	766,200	699,600	638,200	577,800	522,600	467,400	414,800	362,200	317,900	273,600
	K*BD100M4A*	(2) 6FE-50	1,071,000	980,800	892,000	817,000	746,400	680,400	613,500	546,600	486,800	427,000	375,500	324,000
100°F Ambient	K*BD030M4A*	(2) 4NE-20	–	353,000	322,400	293,600	267,000	242,200	217,800	193,400	171,000	148,600	130,100	111,600
	K*BD040M4A*	(2) 4JE-22	–	381,200	349,200	318,400	289,400	262,800	235,700	208,600	184,700	160,800	140,200	119,600
	K*BD050M4A*	(2) 4HE-25	–	464,800	424,800	385,800	350,600	318,000	285,100	252,200	222,400	192,600	167,400	142,200
	K*BD060M4A*	(2) 4GE-30	–	543,000	497,000	452,800	412,800	375,000	337,500	300,000	265,700	231,400	202,500	173,600
	K*BD070M4A*	(2) 6HE-35	–	713,600	646,200	589,000	534,000	484,800	435,200	385,600	340,800	296,000	258,200	220,400
	K*BD080M4A*	(2) 6GE-40	–	810,000	733,600	670,200	609,600	550,400	497,100	443,800	393,300	342,800	300,000	257,200
	K*BD100M4A*	(2) 6FE-50	–	947,800	862,400	789,000	720,200	655,800	592,400	529,000	469,000	409,000	359,400	309,800
110°F Ambient	K*BD030M4A*	(2) 4NE-20	–	–	293,600	266,600	242,000	218,800	195,500	172,200	151,800	131,400	114,500	97,600
	K*BD040M4A*	(2) 4JE-22	–	–	318,200	289,200	262,200	237,200	211,800	186,400	163,900	141,400	122,500	103,600
	K*BD050M4A*	(2) 4HE-25	–	–	386,600	351,000	317,800	287,000	255,600	224,200	196,900	169,600	146,500	123,400
	K*BD060M4A*	(2) 4GE-30	–	–	454,000	413,200	375,200	340,000	304,100	268,200	237,000	205,800	178,900	152,000
	K*BD070M4A*	(2) 6HE-35	–	–	596,000	540,800	490,400	443,000	397,400	351,800	308,800	265,800	231,300	196,800
	K*BD080M4A*	(2) 6GE-40	–	–	670,800	610,400	555,600	502,800	450,000	397,200	350,900	304,600	265,500	226,400
	K*BD100M4A*	(2) 6FE-50	–	–	781,400	711,600	648,400	588,200	527,900	467,600	413,200	358,800	313,300	267,800

Head fan required

* Each asterisk represents a variable character based upon model and voltage ordered. See page 3 for nomenclature.

All capacities are calculated at 65°F return gas temperature and dew point values.

‡ Multiply capacity by .83 when used with 50 Hz power.

CAPACITY DATA (BTUH)

MEDIUM TEMPERATURE R407C BITZER // DUAL COMPRESSOR // 60 HZ‡

	Model No.	Comp. Model No.	Suction Temperature (°F)											
			45°	40°	35°	30°	25°	20°	15°	10°	5°	0°	-5°	-10°
90°F Ambient	K*BD030M4A*	(2) 4NE-20	406,000	367,200	336,400	306,800	279,800	254,400	228,800	203,200	180,600	158,000	138,600	119,200
	K*BD040M4A*	(2) 4JE-22	476,200	434,400	392,000	355,600	323,400	293,200	262,500	231,800	203,900	176,000	152,200	128,400
	K*BD050M4A*	(2) 4HE-25	546,800	503,600	453,400	413,200	376,600	341,600	306,800	272,000	240,700	209,400	181,600	153,800
	K*BD060M4A*	(2) 4GE-30	648,800	598,200	537,800	493,600	441,800	405,400	366,100	326,800	290,400	254,000	222,800	191,600
	K*BD070M4A*	(2) 6HE-35	814,200	737,000	671,000	610,600	556,200	501,200	451,800	402,400	357,000	311,600	274,500	237,400
	K*BD080M4A*	(2) 6GE-40	933,400	845,800	773,800	711,000	647,000	586,400	530,400	474,400	424,200	374,000	330,800	287,600
	K*BD100M4A*	(2) 6FE-50	1,076,200	981,800	894,600	819,400	746,400	672,200	611,700	551,200	490,800	430,400	378,700	327,000
95°F Ambient	K*BD030M4A*	(2) 4NE-20	390,000	352,400	322,600	293,800	267,800	243,000	218,600	194,200	172,000	149,800	131,100	112,400
	K*BD040M4A*	(2) 4JE-22	457,400	416,800	375,800	340,800	309,200	279,400	249,700	220,000	193,200	166,400	143,500	120,600
	K*BD050M4A*	(2) 4HE-25	525,400	478,800	434,600	396,400	359,600	326,200	292,400	258,600	228,300	198,000	171,600	145,200
	K*BD060M4A*	(2) 4GE-30	624,000	569,600	516,600	471,600	429,800	390,400	351,700	313,000	277,000	241,000	210,300	179,600
	K*BD070M4A*	(2) 6HE-35	781,400	707,600	642,800	584,800	532,000	482,200	433,200	384,200	340,200	296,200	259,500	222,800
	K*BD080M4A*	(2) 6GE-40	896,200	811,800	743,600	680,800	619,800	561,200	507,500	453,800	404,400	355,000	313,100	271,200
	K*BD100M4A*	(2) 6FE-50	1,034,400	943,400	858,400	785,400	714,600	647,200	586,400	525,600	466,700	407,800	358,500	309,200
100°F Ambient	K*BD030M4A*	(2) 4NE-20	–	338,400	309,000	281,000	255,800	231,800	208,100	184,400	162,900	141,400	123,300	105,200
	K*BD040M4A*	(2) 4JE-22	–	399,400	359,800	325,600	294,800	266,000	237,300	208,600	182,800	157,000	135,000	113,000
	K*BD050M4A*	(2) 4HE-25	–	458,800	416,400	377,600	343,200	310,600	278,300	246,000	216,300	186,600	161,200	135,800
	K*BD060M4A*	(2) 4GE-30	–	546,600	495,200	452,800	411,600	372,800	335,300	297,800	263,100	228,400	199,600	170,800
	K*BD070M4A*	(2) 6HE-35	–	673,000	611,200	555,200	504,200	455,600	408,400	361,200	318,900	276,600	241,700	206,800
	K*BD080M4A*	(2) 6GE-40	–	779,800	712,000	652,200	592,000	534,600	482,700	430,800	383,400	336,000	295,500	255,000
	K*BD100M4A*	(2) 6FE-50	–	911,600	830,000	758,400	689,600	623,800	566,200	508,600	449,600	390,600	343,100	295,600
110°F Ambient	K*BD030M4A*	(2) 4NE-20	–	–	281,400	255,200	231,800	209,400	186,800	164,200	144,600	125,000	108,500	92,000
	K*BD040M4A*	(2) 4JE-22	–	–	327,800	295,800	267,000	240,200	213,300	186,400	162,200	138,000	118,000	98,000
	K*BD050M4A*	(2) 4HE-25	–	–	379,000	343,600	311,000	280,200	249,400	218,600	191,400	164,200	141,000	117,800
	K*BD060M4A*	(2) 4GE-30	–	–	452,400	413,200	374,200	338,000	302,100	266,200	234,700	203,200	176,400	149,600
	K*BD070M4A*	(2) 6HE-35	–	–	563,800	509,800	463,000	416,400	373,000	329,600	289,000	248,400	216,500	184,600
	K*BD080M4A*	(2) 6GE-40	–	–	651,000	594,000	539,600	488,400	437,000	385,600	342,100	298,600	261,500	224,400
	K*BD100M4A*	(2) 6FE-50	–	–	752,000	684,000	620,800	559,400	504,500	449,600	396,100	342,600	299,100	255,600

Head fan required

* Each asterisk represents a variable character based upon model and voltage ordered. See page 3 for nomenclature.
All capacities are calculated at 65°F return gas temperature and dew point values.
‡ Multiply capacity by .83 when used with 50 Hz power.

CAPACITY DATA (BTUH)

MEDIUM TEMPERATURE R448A,R449A/B BITZER // DUAL COMPRESSOR // 60 HZ‡

	Model No.	Comp. Model No.	Suction Temperature (°F)											
			45°	40°	35°	30°	25°	20°	15°	10°	5°	0°	-5°	-10°
90°F Ambient	K*BD030M4A*	(2) 4NE-20	433,800	396,600	359,800	329,600	300,000	273,200	246,300	219,400	195,800	172,200	152,500	132,800
	K*BD040M4A*	(2) 4JE-22	502,200	459,400	416,200	381,000	348,000	317,000	286,500	256,000	227,900	199,800	176,100	152,400
	K*BD050M4A*	(2) 4HE-25	570,200	528,200	477,800	437,200	401,800	366,400	332,600	298,800	267,500	236,200	209,100	182,000
	K*BD060M4A*	(2) 4GE-30	659,200	610,600	552,000	509,600	457,600	422,200	383,700	345,200	310,000	274,800	244,900	215,000
	K*BD070M4A*	(2) 6HE-35	862,600	787,800	719,600	658,800	601,200	544,600	494,300	444,000	397,100	350,200	311,400	272,600
	K*BD080M4A*	(2) 6GE-40	953,200	874,800	796,800	737,000	673,800	613,800	558,400	503,000	452,100	401,200	357,900	314,600
	K*BD100M4A*	(2) 6FE-50	1,114,200	1,027,000	940,600	870,200	801,200	731,200	668,100	605,000	544,800	484,600	431,200	377,800
95°F Ambient	K*BD030M4A*	(2) 4NE-20	416,800	380,600	345,000	315,600	287,000	260,800	235,300	209,800	186,500	163,200	144,200	125,200
	K*BD040M4A*	(2) 4JE-22	482,400	440,800	399,000	365,200	332,600	302,200	272,600	243,000	216,000	189,000	166,100	143,200
	K*BD050M4A*	(2) 4HE-25	548,000	502,200	458,000	419,400	383,600	349,800	316,900	284,000	253,700	223,400	197,600	171,800
	K*BD060M4A*	(2) 4GE-30	634,000	581,400	530,400	486,800	445,200	406,600	368,600	330,600	295,700	260,800	231,200	201,600
	K*BD070M4A*	(2) 6HE-35	827,800	756,400	689,400	631,000	575,000	524,000	474,000	424,000	378,500	333,000	294,400	255,800
	K*BD080M4A*	(2) 6GE-40	915,200	839,600	765,600	705,800	645,400	587,400	534,300	481,200	431,000	380,800	338,700	296,600
	K*BD100M4A*	(2) 6FE-50	1,071,000	986,800	902,600	834,000	767,000	704,000	640,500	577,000	518,100	459,200	408,200	357,200
100°F Ambient	K*BD030M4A*	(2) 4NE-20	–	365,400	330,400	301,800	274,000	248,600	223,900	199,200	176,600	154,000	135,600	117,200
	K*BD040M4A*	(2) 4JE-22	–	422,400	382,000	349,000	317,000	287,800	259,100	230,400	204,400	178,400	156,300	134,200
	K*BD050M4A*	(2) 4HE-25	–	481,200	438,800	399,600	366,000	333,000	301,500	270,000	240,300	210,600	185,700	160,800
	K*BD060M4A*	(2) 4GE-30	–	558,000	508,600	467,400	426,400	388,200	351,300	314,400	280,800	247,200	219,400	191,600
	K*BD070M4A*	(2) 6HE-35	–	719,400	655,600	599,000	545,000	495,200	446,900	398,600	354,800	311,000	274,200	237,400
	K*BD080M4A*	(2) 6GE-40	–	806,600	733,000	676,200	616,400	559,600	508,300	457,000	408,700	360,400	319,600	278,800
	K*BD100M4A*	(2) 6FE-50	–	953,600	872,600	805,400	740,000	678,600	618,500	558,400	499,100	439,800	390,700	341,600
110°F Ambient	K*BD030M4A*	(2) 4NE-20	–	–	301,000	274,000	248,400	224,600	201,000	177,400	156,800	136,200	119,400	102,600
	K*BD040M4A*	(2) 4JE-22	–	–	348,000	317,000	287,200	259,800	232,800	205,800	181,300	156,800	136,500	116,200
	K*BD050M4A*	(2) 4HE-25	–	–	399,400	363,400	331,800	300,600	270,300	240,000	212,700	185,400	162,400	139,400
	K*BD060M4A*	(2) 4GE-30	–	–	464,600	426,600	387,600	352,000	316,600	281,200	250,500	219,800	193,800	167,800
	K*BD070M4A*	(2) 6HE-35	–	–	604,600	550,000	500,400	452,400	408,000	363,600	321,400	279,200	245,600	212,000
	K*BD080M4A*	(2) 6GE-40	–	–	670,200	615,800	561,800	511,200	460,100	409,000	364,600	320,200	282,800	245,400
	K*BD100M4A*	(2) 6FE-50	–	–	790,600	726,400	666,200	608,600	551,100	493,600	439,700	385,800	340,500	295,200

Head fan required

* Each asterisk represents a variable character based upon model and voltage ordered. See page 3 for nomenclature.

All capacities are calculated at 65°F return gas temperature and dew point values.

‡ Multiply capacity by .83 when used with 50 Hz power.

CAPACITY DATA (BTUH)

MEDIUM TEMPERATURE R454C BITZER // PARALLEL COMPRESSOR // 60 HZ‡

	Model No.	Comp. Model No.	Suction Temperature (°F)											
			45°	40°	35°	30°	25°	20°	15°	10°	5°	0°	-5°	-10°
90°F Ambient	K*DP050M4A*	(2) 4HE-25	494,040	452,500	412,380	374,200	337,960	303,920	273,210	242,500	215,720	188,940	165,880	142,820
	K*DP060M4A*	(2) 4GE-30	568,900	521,180	475,040	431,640	389,880	351,020	315,580	280,140	249,580	219,020	192,300	165,580
	K*DP070M4A*	(2) 6HE-35	746,500	681,660	618,740	560,720	505,440	453,620	406,820	360,020	320,200	280,380	245,820	211,260
	K*DP080M4A*	(2) 6GE-40	822,620	754,520	688,380	626,140	566,120	510,360	458,920	407,480	363,940	320,400	281,920	243,440
	K*DP0100M4A*	(2) 6FE-50	991,140	911,200	834,060	759,640	688,100	621,700	560,570	499,440	444,920	390,400	344,650	298,900
95°F Ambient	K*DP050M4A*	(2) 4HE-25	473,780	433,420	394,880	358,600	323,740	291,020	260,980	230,940	205,340	179,740	157,580	135,420
	K*DP060M4A*	(2) 4GE-30	544,960	499,180	454,280	412,240	372,800	335,760	302,270	268,780	238,690	208,600	183,190	157,780
	K*DP070M4A*	(2) 6HE-35	716,120	653,300	593,880	537,620	484,080	434,600	389,510	344,420	306,060	267,700	234,750	201,800
	K*DP080M4A*	(2) 6GE-40	787,560	721,960	658,780	599,620	542,740	487,980	438,630	389,280	347,080	304,880	267,920	230,960
	K*DP0100M4A*	(2) 6FE-50	948,580	871,980	797,140	726,960	658,320	594,520	535,480	476,440	424,790	373,140	328,130	283,120
100°F Ambient	K*DP050M4A*	(2) 4HE-25	-	415,060	378,060	342,540	308,940	277,600	249,210	220,820	195,890	170,960	149,360	127,760
	K*DP060M4A*	(2) 4GE-30	-	476,680	434,220	394,420	356,100	320,700	287,900	255,100	226,620	198,140	173,640	149,140
	K*DP070M4A*	(2) 6HE-35	-	625,400	568,680	513,440	463,000	414,940	371,550	328,160	290,510	252,860	221,520	190,180
	K*DP080M4A*	(2) 6GE-40	-	691,920	630,640	572,460	517,580	465,600	418,200	370,800	330,280	289,760	254,590	219,420
	K*DP0100M4A*	(2) 6FE-50	-	832,960	762,740	693,740	628,720	567,060	510,220	453,380	404,090	354,800	312,010	269,220
110°F Ambient	K*DP050M4A*	(2) 4HE-25	-	-	343,000	310,700	279,720	250,380	223,850	197,320	174,380	151,440	131,870	112,300
	K*DP060M4A*	(2) 4GE-30	-	-	394,040	357,100	322,340	289,700	259,170	228,640	202,320	176,000	153,220	130,440
	K*DP070M4A*	(2) 6HE-35	-	-	516,080	465,840	419,340	375,820	335,280	294,740	260,170	225,600	197,280	168,960
	K*DP080M4A*	(2) 6GE-40	-	-	572,260	518,600	468,060	420,980	377,510	334,040	296,170	258,300	225,770	193,240
	K*DP0100M4A*	(2) 6FE-50	-	-	690,900	628,940	568,860	512,460	459,960	407,460	362,940	318,420	278,090	237,760

Head fan required Additional Compressor Cooling Required

* Each asterisk represents a variable character based upon model and voltage ordered. See page 3 for nomenclature.
All capacities are calculated at 65°F return gas temperature and dew point values.
‡ Multiply capacity by .83 when used with 50 Hz power.

CAPACITY DATA (BTUH)

MEDIUM TEMPERATURE R455A BITZER // PARALLEL COMPRESSOR // 60 HZ‡

	Model No.	Comp. Model No.	Suction Temperature (°F)											
			45°	40°	35°	30°	25°	20°	15°	10°	5°	0°	-5°	-10°
90°F Ambient	K*DP050M4A*	(2) 4HE-25	513,840	470,020	428,580	388,740	351,080	315,260	283,040	250,820	222,370	193,920	170,010	146,100
	K*DP060M4A*	(2) 4GE-30	590,100	540,080	492,440	448,140	404,900	364,100	326,870	289,640	257,160	224,680	196,970	169,260
	K*DP070M4A*	(2) 6HE-35	777,380	709,040	644,000	582,700	524,800	470,420	421,640	372,860	330,470	288,080	251,820	215,560
	K*DP080M4A*	(2) 6GE-40	853,860	783,340	712,200	648,680	585,860	526,820	473,970	421,120	374,540	327,960	287,920	247,880
	K*DP0100M4A*	(2) 6FE-50	1,026,700	944,120	863,500	786,080	712,260	643,100	579,470	515,840	460,120	404,400	355,190	305,980
95°F Ambient	K*DP050M4A*	(2) 4HE-25	492,380	450,260	410,380	371,580	333,800	301,400	270,010	238,620	211,530	184,440	161,270	138,100
	K*DP060M4A*	(2) 4GE-30	565,160	516,860	471,580	428,460	386,960	347,840	311,780	275,720	244,350	212,980	186,420	159,860
	K*DP070M4A*	(2) 6HE-35	744,680	678,880	615,800	557,420	500,400	450,180	402,650	355,120	313,820	272,520	238,070	203,620
	K*DP080M4A*	(2) 6GE-40	818,060	748,780	682,300	619,900	560,240	504,480	452,960	401,440	356,200	310,960	272,750	234,540
	K*DP0100M4A*	(2) 6FE-50	982,120	901,700	825,620	751,760	681,820	613,180	552,610	492,040	438,410	384,780	337,160	289,540
100°F Ambient	K*DP050M4A*	(2) 4HE-25	-	430,700	391,400	354,900	320,260	287,280	257,090	226,900	200,590	174,280	151,850	129,420
	K*DP060M4A*	(2) 4GE-30	-	493,640	450,360	408,760	368,640	329,880	295,800	261,720	231,690	201,660	175,860	150,060
	K*DP070M4A*	(2) 6HE-35	-	649,800	590,340	533,500	478,520	429,220	383,500	337,780	297,880	257,980	224,670	191,360
	K*DP080M4A*	(2) 6GE-40	-	715,040	650,820	590,620	534,700	479,500	430,510	381,520	338,020	294,520	257,480	220,440
	K*DP0100M4A*	(2) 6FE-50	-	861,280	788,300	716,200	651,880	586,140	527,030	467,920	415,110	362,300	317,520	272,740
110°F Ambient	K*DP050M4A*	(2) 4HE-25	-	-	355,100	320,520	288,440	258,480	230,350	202,220	177,690	153,160	132,680	112,200
	K*DP060M4A*	(2) 4GE-30	-	-	406,960	368,960	331,860	296,200	264,670	233,140	205,320	177,500	154,150	130,800
	K*DP070M4A*	(2) 6HE-35	-	-	535,460	482,300	432,680	386,240	343,910	301,580	264,350	227,120	196,060	165,000
	K*DP080M4A*	(2) 6GE-40	-	-	588,780	533,520	479,080	430,420	385,240	340,060	299,570	259,080	224,800	190,520
	K*DP0100M4A*	(2) 6FE-50	-	-	711,820	646,660	584,360	527,720	472,760	417,800	369,390	320,980	278,520	236,060

Head fan required Additional Compressor Cooling Required

* Each asterisk represents a variable character based upon model and voltage ordered. See page 3 for nomenclature.

All capacities are calculated at 65°F return gas temperature and dew point values.

‡ Multiply capacity by .83 when used with 50 Hz power.

CAPACITY DATA (BTUH)

MEDIUM TEMPERATURE R404A BITZER // PARALLEL COMPRESSOR // 60 HZ‡

	Model No.	Comp. Model No.	Suction Temperature (°F)											
			45°	40°	35°	30°	25°	20°	15°	10°	5°	0°	-5°	-10°
90°F Ambient	K*DP050M4A*	(2) 4HE-25	585,000	543,800	501,200	458,600	421,400	384,800	351,000	317,200	286,600	256,000	228,600	201,200
	K*DP060M4A*	(2) 4GE-30	687,200	637,600	588,400	538,400	495,200	454,800	413,900	373,000	337,100	301,200	268,800	236,400
	K*DP070M4A*	(2) 6HE-35	895,400	831,600	764,400	699,000	642,200	585,200	532,900	480,600	434,500	388,400	346,000	303,600
	K*DP080M4A*	(2) 6GE-40	983,400	914,400	842,400	773,800	713,000	654,400	596,400	538,400	487,100	435,800	389,200	342,600
	K*DP0100M4A*	(2) 6FE-50	1,133,200	1,059,800	979,000	902,800	835,400	768,600	702,500	636,400	577,700	519,000	464,700	410,400
95°F Ambient	K*DP050M4A*	(2) 4HE-25	558,400	518,600	477,000	436,400	400,600	365,400	333,000	300,600	271,900	243,200	216,100	189,000
	K*DP060M4A*	(2) 4GE-30	649,200	603,200	553,000	507,600	466,600	426,000	388,100	350,200	316,000	281,800	251,300	220,800
	K*DP070M4A*	(2) 6HE-35	848,400	786,000	722,400	659,200	604,200	553,400	502,200	451,000	406,600	362,200	321,800	281,400
	K*DP080M4A*	(2) 6GE-40	928,000	864,000	793,800	727,600	670,400	613,200	559,000	504,800	456,900	409,000	364,500	320,000
	K*DP0100M4A*	(2) 6FE-50	1,079,800	1,008,400	931,800	858,200	792,400	726,400	664,800	603,200	546,800	490,400	438,700	387,000
100°F Ambient	K*DP050M4A*	(2) 4HE-25	–	493,400	452,600	413,600	380,000	346,200	315,600	285,000	256,500	228,000	202,700	177,400
	K*DP060M4A*	(2) 4GE-30	–	573,800	525,800	481,400	442,000	403,200	367,300	331,400	298,600	265,800	236,700	207,600
	K*DP070M4A*	(2) 6HE-35	–	749,000	686,400	626,000	573,600	521,400	474,000	426,600	383,700	340,800	302,600	264,400
	K*DP080M4A*	(2) 6GE-40	–	820,400	755,000	690,200	635,600	580,400	528,700	477,000	430,600	384,200	342,700	301,200
	K*DP0100M4A*	(2) 6FE-50	–	957,800	883,600	813,200	749,600	687,200	628,900	570,600	516,300	462,000	412,800	363,600
110°F Ambient	K*DP050M4A*	(2) 4HE-25	–	–	405,000	371,400	339,400	306,200	278,800	251,400	225,900	200,400	177,100	153,800
	K*DP060M4A*	(2) 4GE-30	–	–	470,000	430,600	394,600	357,600	326,000	294,400	264,600	234,800	208,500	182,200
	K*DP070M4A*	(2) 6HE-35	–	–	616,400	561,000	513,800	465,600	421,600	377,600	338,400	299,200	264,400	229,600
	K*DP080M4A*	(2) 6GE-40	–	–	674,200	616,800	565,800	515,400	468,900	422,400	380,000	337,600	299,700	261,800
	K*DP0100M4A*	(2) 6FE-50	–	–	790,200	725,400	667,600	610,800	557,300	503,800	454,900	406,000	361,200	316,400

MEDIUM TEMPERATURE R407A, R407F DISCUS // PARALLEL COMPRESSOR // 60 HZ‡

	Model No.	Comp. Model No.	Suction Temperature (°F)											
			45°	40°	35°	30°	25°	20°	15°	10°	5°	0°	-5°	-10°
90°F Ambient	K*DP050M4A*	(2) 4HE-25	559,000	510,200	462,600	422,200	384,800	349,800	314,400	279,000	247,600	216,200	188,600	161,000
	K*DP060M4A*	(2) 4GE-30	649,800	594,200	539,600	493,600	443,000	407,800	368,600	329,400	293,400	257,400	226,100	194,800
	K*DP070M4A*	(2) 6HE-35	857,200	781,400	709,400	647,800	589,000	533,200	481,400	429,600	381,500	333,400	293,200	253,000
	K*DP080M4A*	(2) 6GE-40	961,200	878,600	797,400	730,600	666,200	603,800	546,200	488,600	435,100	381,600	335,900	290,200
	K*DP0100M4A*	(2) 6FE-50	1,114,200	1,020,800	929,600	852,400	779,600	706,600	639,900	573,200	511,900	450,600	396,600	342,600
95°F Ambient	K*DP050M4A*	(2) 4HE-25	537,200	485,000	443,400	405,000	367,400	334,000	299,600	265,200	234,800	204,400	178,200	152,000
	K*DP060M4A*	(2) 4GE-30	625,000	565,800	518,400	471,600	431,000	392,800	354,100	315,400	279,800	244,200	213,400	182,600
	K*DP070M4A*	(2) 6HE-35	822,600	750,200	679,600	620,400	563,400	513,000	461,600	410,200	363,600	317,000	277,200	237,400
	K*DP080M4A*	(2) 6GE-40	922,800	843,200	766,200	699,600	638,200	577,800	522,600	467,400	414,800	362,200	317,900	273,600
	K*DP0100M4A*	(2) 6FE-50	1,071,000	980,800	892,000	817,000	746,400	680,400	613,500	546,600	486,800	427,000	375,500	324,000
100°F Ambient	K*DP050M4A*	(2) 4HE-25	–	464,800	424,800	385,800	350,600	318,000	285,100	252,200	222,400	192,600	167,400	142,200
	K*DP060M4A*	(2) 4GE-30	–	543,000	497,000	452,800	412,800	375,000	337,500	300,000	265,700	231,400	202,500	173,600
	K*DP070M4A*	(2) 6HE-35	–	713,600	646,200	589,000	534,000	484,800	435,200	385,600	340,800	296,000	258,200	220,400
	K*DP080M4A*	(2) 6GE-40	–	810,000	733,600	670,200	609,600	550,400	497,100	443,800	393,300	342,800	300,000	257,200
	K*DP0100M4A*	(2) 6FE-50	–	947,800	862,400	789,000	720,200	655,800	592,400	529,000	469,000	409,000	359,400	309,800
110°F Ambient	K*DP050M4A*	(2) 4HE-25	–	–	386,600	351,000	317,800	287,000	255,600	224,200	196,900	169,600	146,500	123,400
	K*DP060M4A*	(2) 4GE-30	–	–	454,000	413,200	375,200	340,000	304,100	268,200	237,000	205,800	178,900	152,000
	K*DP070M4A*	(2) 6HE-35	–	–	596,000	540,800	490,400	443,000	397,400	351,800	308,800	265,800	231,300	196,800
	K*DP080M4A*	(2) 6GE-40	–	–	670,800	610,400	555,600	502,800	450,000	397,200	350,900	304,600	265,500	226,400
	K*DP0100M4A*	(2) 6FE-50	–	–	781,400	711,600	648,400	588,200	527,900	467,600	413,200	358,800	313,300	267,800

Head fan required

See Notes on page 16

CAPACITY DATA (BTUH)

MEDIUM TEMPERATURE R407C BITZER // PARALLEL COMPRESSOR // 60 HZ‡

	Model No.	Comp. Model No.	Suction Temperature (°F)											
			45°	40°	35°	30°	25°	20°	15°	10°	5°	0°	-5°	-10°
90°F Ambient	K*DP050M4A*	(2) 4HE-25	546,800	503,600	453,400	413,200	376,600	341,600	306,800	272,000	240,700	209,400	181,600	153,800
	K*DP060M4A*	(2) 4GE-30	648,800	598,200	537,800	493,600	441,800	405,400	366,100	326,800	290,400	254,000	222,800	191,600
	K*DP070M4A*	(2) 6HE-35	814,200	737,000	671,000	610,600	556,200	501,200	451,800	402,400	357,000	311,600	274,500	237,400
	K*DP080M4A*	(2) 6GE-40	933,400	845,800	773,800	711,000	647,000	586,400	530,400	474,400	424,200	374,000	330,800	287,600
	K*DP0100M4A*	(2) 6FE-50	1,076,200	981,800	894,600	819,400	746,400	672,200	611,700	551,200	490,800	430,400	378,700	327,000
95°F Ambient	K*DP050M4A*	(2) 4HE-25	525,400	478,800	434,600	396,400	359,600	326,200	292,400	258,600	228,300	198,000	171,600	145,200
	K*DP060M4A*	(2) 4GE-30	624,000	569,600	516,600	471,600	429,800	390,400	351,700	313,000	277,000	241,000	210,300	179,600
	K*DP070M4A*	(2) 6HE-35	781,400	707,600	642,800	584,800	532,000	482,200	433,200	384,200	340,200	296,200	259,500	222,800
	K*DP080M4A*	(2) 6GE-40	896,200	811,800	743,600	680,800	619,800	561,200	507,500	453,800	404,400	355,000	313,100	271,200
	K*DP0100M4A*	(2) 6FE-50	1,034,400	943,400	858,400	785,400	714,600	647,200	586,400	525,600	466,700	407,800	358,500	309,200
100°F Ambient	K*DP050M4A*	(2) 4HE-25	–	458,800	416,400	377,600	343,200	310,600	278,300	246,000	216,300	186,600	161,200	135,800
	K*DP060M4A*	(2) 4GE-30	–	546,600	495,200	452,800	411,600	372,800	335,300	297,800	263,100	228,400	199,600	170,800
	K*DP070M4A*	(2) 6HE-35	–	673,000	611,200	555,200	504,200	455,600	408,400	361,200	318,900	276,600	241,700	206,800
	K*DP080M4A*	(2) 6GE-40	–	779,800	712,000	652,200	592,000	534,600	482,700	430,800	383,400	336,000	295,500	255,000
	K*DP0100M4A*	(2) 6FE-50	–	911,600	830,000	758,400	689,600	623,800	566,200	508,600	449,600	390,600	343,100	295,600
110°F Ambient	K*DP050M4A*	(2) 4HE-25	–	–	379,000	343,600	311,000	280,200	249,400	218,600	191,400	164,200	141,000	117,800
	K*DP060M4A*	(2) 4GE-30	–	–	452,400	413,200	374,200	338,000	302,100	266,200	234,700	203,200	176,400	149,600
	K*DP070M4A*	(2) 6HE-35	–	–	563,800	509,800	463,000	416,400	373,000	329,600	289,000	248,400	216,500	184,600
	K*DP080M4A*	(2) 6GE-40	–	–	651,000	594,000	539,600	488,400	437,000	385,600	342,100	298,600	261,500	224,400
	K*DP0100M4A*	(2) 6FE-50	–	–	752,000	684,000	620,800	559,400	504,500	449,600	396,100	342,600	299,100	255,600

MEDIUM TEMPERATURE R448A, R449A/B BITZER // PARALLEL COMPRESSOR // 60 HZ‡

	Model No.	Comp. Model No.	Suction Temperature (°F)											
			45°	40°	35°	30°	25°	20°	15°	10°	5°	0°	-5°	-10°
90°F Ambient	K*DP050M4A*	(2) 4HE-25	570,200	528,200	477,800	437,200	401,800	366,400	332,600	298,800	267,500	236,200	209,100	182,000
	K*DP060M4A*	(2) 4GE-30	659,200	610,600	552,000	509,600	457,600	422,200	383,700	345,200	310,000	274,800	244,900	215,000
	K*DP070M4A*	(2) 6HE-35	862,600	787,800	719,600	658,800	601,200	544,600	494,300	444,000	397,100	350,200	311,400	272,600
	K*DP080M4A*	(2) 6GE-40	953,200	874,800	796,800	737,000	673,800	613,800	558,400	503,000	452,100	401,200	357,900	314,600
	K*DP0100M4A*	(2) 6FE-50	1,114,200	1,027,000	940,600	870,200	801,200	731,200	668,100	605,000	544,800	484,600	431,200	377,800
95°F Ambient	K*DP050M4A*	(2) 4HE-25	548,000	502,200	458,000	419,400	383,600	349,800	316,900	284,000	253,700	223,400	197,600	171,800
	K*DP060M4A*	(2) 4GE-30	634,000	581,400	530,400	486,800	445,200	406,600	368,600	330,600	295,700	260,800	231,200	201,600
	K*DP070M4A*	(2) 6HE-35	827,800	756,400	689,400	631,000	575,000	524,000	474,000	424,000	378,500	333,000	294,400	255,800
	K*DP080M4A*	(2) 6GE-40	915,200	839,600	765,600	705,800	645,400	587,400	534,300	481,200	431,000	380,800	338,700	296,600
	K*DP0100M4A*	(2) 6FE-50	1,071,000	986,800	902,600	834,000	767,000	704,000	640,500	577,000	518,100	459,200	408,200	357,200
100°F Ambient	K*DP050M4A*	(2) 4HE-25	–	481,200	438,800	399,600	366,000	333,000	301,500	270,000	240,300	210,600	185,700	160,800
	K*DP060M4A*	(2) 4GE-30	–	558,000	508,600	467,400	426,400	388,200	351,300	314,400	280,800	247,200	219,400	191,600
	K*DP070M4A*	(2) 6HE-35	–	719,400	655,600	599,000	545,000	495,200	446,900	398,600	354,800	311,000	274,200	237,400
	K*DP080M4A*	(2) 6GE-40	–	806,600	733,000	676,200	616,400	559,600	508,300	457,000	408,700	360,400	319,600	278,800
	K*DP0100M4A*	(2) 6FE-50	–	953,600	872,600	805,400	740,000	678,600	618,500	558,400	499,100	439,800	390,700	341,600
110°F Ambient	K*DP050M4A*	(2) 4HE-25	–	–	399,400	363,400	331,800	300,600	270,300	240,000	212,700	185,400	162,400	139,400
	K*DP060M4A*	(2) 4GE-30	–	–	464,600	426,600	387,600	352,000	316,600	281,200	250,500	219,800	193,800	167,800
	K*DP070M4A*	(2) 6HE-35	–	–	604,600	550,000	500,400	452,400	408,000	363,600	321,400	279,200	245,600	212,000
	K*DP080M4A*	(2) 6GE-40	–	–	670,200	615,800	561,800	511,200	460,100	409,000	364,600	320,200	282,800	245,400
	K*DP0100M4A*	(2) 6FE-50	–	–	790,600	726,400	666,200	608,600	551,100	493,600	439,700	385,800	340,500	295,200

See Notes on page 16

CAPACITY DATA (BTUH)

LOW TEMPERATURE R454A BITZER // SINGLE COMPRESSOR // 60 HZ‡

	Model No.	Comp. Model No.	Suction Temperature (°F)								
			0°	-5°	-10°	-15°	-20°	-25°	-30°	-35°	-40°
90°F Ambient	K*BV022L4A*	4GE-23	123,640	110,050	97,480	85,560	74,590	64,370	54,860	45,870	37,130
	K*BV027L4A*	6HE-28	153,490	137,530	121,680	106,670	93,320	80,330	68,150	56,440	45,580
	K*BV030L4A*	6GE-34	187,270	168,050	149,530	132,110	115,950	100,650	86,700	73,070	59,930
	K*BV040L4A*	6FE-44	226,530	203,400	181,560	160,900	141,760	123,370	106,730	90,370	74,610
95°F Ambient	K*BV022L4A*	4GE-23	117,480	104,590	92,110	81,030	70,370	60,260	51,420	42,590	35,040
	K*BV027L4A*	6HE-28	146,780	130,920	115,660	101,330	88,160	75,630	64,070	52,980	43,150
	K*BV030L4A*	6GE-34	179,020	160,390	142,550	125,790	110,170	95,230	81,750	68,520	56,780
	K*BV040L4A*	6FE-44	216,770	194,600	173,350	153,550	134,930	117,400	100,890	85,470	71,420
100°F Ambient	K*BV022L4A*	4GE-23	111,620	99,290	87,150	76,340	66,040	56,760	47,770	39,530	-
	K*BV027L4A*	6HE-28	139,630	124,330	109,930	96,220	83,270	71,190	59,970	49,270	-
	K*BV030L4A*	6GE-34	170,900	152,520	135,340	119,400	104,410	89,910	76,790	63,890	-
	K*BV040L4A*	6FE-44	207,070	185,260	165,280	145,820	127,910	110,850	94,910	79,620	-
110°F Ambient	K*BV022L4A*	4GE-23	99,940	88,140	76,820	66,750	57,460	48,790	40,770	33,830	-
	K*BV027L4A*	6HE-28	125,920	111,610	97,730	85,130	73,380	61,980	51,460	41,890	-
	K*BV030L4A*	6GE-34	154,690	137,810	122,020	106,710	92,730	79,390	67,080	55,610	-
	K*BV040L4A*	6FE-44	187,690	167,960	149,050	131,010	114,330	98,720	83,330	69,530	-

LOW TEMPERATURE R454C BITZER // SINGLE COMPRESSOR // 60 HZ‡

	Model No.	Comp. Model No.	Suction Temperature (°F)								
			0°	-5°	-10°	-15°	-20°	-25°	-30°	-35°	-40°
90°F Ambient	K*BV022L4A*	4GE-23	107,280	95,180	83,860	72,920	63,080	53,820	45,350	37,360	30,000
	K*BV027L4A*	6HE-28	139,030	123,110	108,150	94,410	81,400	69,190	58,100	47,760	38,210
	K*BV030L4A*	6GE-34	157,410	140,620	124,010	108,880	94,410	81,320	68,920	57,270	46,270
	K*BV040L4A*	6FE-44	188,120	167,340	147,950	129,600	112,200	96,300	81,310	66,970	53,450
95°F Ambient	K*BV022L4A*	4GE-23	102,030	90,800	79,730	69,540	59,690	50,860	42,540	34,940	27,950
	K*BV027L4A*	6HE-28	132,700	117,290	102,660	89,420	76,750	65,060	54,180	44,340	35,230
	K*BV030L4A*	6GE-34	150,330	133,890	117,730	103,840	89,840	76,920	65,190	53,870	43,440
	K*BV040L4A*	6FE-44	178,970	159,480	140,850	123,250	106,730	90,980	76,380	62,700	49,860
100°F Ambient	K*BV022L4A*	4GE-23	97,080	86,160	75,690	65,400	56,330	47,910	40,050	32,710	-
	K*BV027L4A*	6HE-28	125,810	110,930	97,180	84,260	72,040	60,890	50,470	40,880	-
	K*BV030L4A*	6GE-34	143,280	127,000	112,390	98,310	84,740	72,660	61,410	50,390	-
	K*BV040L4A*	6FE-44	170,460	151,510	133,620	116,380	100,400	85,560	71,640	58,320	-
110°F Ambient	K*BV022L4A*	4GE-23	87,490	77,020	67,260	57,950	49,570	41,910	34,650	28,050	-
	K*BV027L4A*	6HE-28	112,510	98,800	85,790	73,740	62,330	52,060	42,530	33,840	-
	K*BV030L4A*	6GE-34	128,600	113,910	100,330	87,450	75,190	63,700	53,260	43,370	-
	K*BV040L4A*	6FE-44	152,970	135,630	119,130	103,250	88,440	74,700	61,980	50,000	-

Additional Compressor Cooling Required

* Each asterisk represents a variable character based upon model and voltage ordered. See page 3 for nomenclature.

All capacities are calculated at 65°F return gas temperature and dew point values.

‡ Multiply capacity by .83 when used with 50 Hz power.

CAPACITY DATA (BTUH)

LOW TEMPERATURE R455A BITZER // SINGLE COMPRESSOR // 60 HZ‡

	Model No.	Comp. Model No.	Suction Temperature (°F)								
			0°	-5°	-10°	-15°	-20°	-25°	-30°	-35°	-40°
90°F Ambient	K*BV022L4A*	4GE-23	111,090	98,380	86,430	75,220	64,810	55,090	46,230	37,950	30,570
	K*BV027L4A*	6HE-28	141,180	124,690	108,940	94,530	81,060	68,460	56,780	46,270	36,760
	K*BV030L4A*	6GE-34	163,220	145,160	128,460	112,540	97,780	83,480	70,690	58,550	47,380
	K*BV040L4A*	6FE-44	193,910	173,550	153,330	133,930	115,990	98,720	82,810	67,900	54,550
95°F Ambient	K*BV022L4A*	4GE-23	105,850	93,390	82,190	71,190	61,110	51,850	43,360	35,610	28,270
	K*BV027L4A*	6HE-28	134,570	118,470	103,430	89,300	76,250	64,130	52,970	42,810	33,560
	K*BV030L4A*	6GE-34	155,800	138,470	122,220	106,910	92,230	78,850	66,160	54,560	43,990
	K*BV040L4A*	6FE-44	183,820	164,670	145,360	126,670	109,130	93,170	77,670	63,420	50,580
100°F Ambient	K*BV022L4A*	4GE-23	100,500	88,930	77,320	66,980	57,540	48,530	40,380	32,940	-
	K*BV027L4A*	6HE-28	127,360	112,230	97,560	83,690	71,260	59,570	48,850	39,180	-
	K*BV030L4A*	6GE-34	147,950	131,350	115,730	100,800	86,950	73,860	61,900	50,670	-
	K*BV040L4A*	6FE-44	176,050	156,550	137,270	119,440	102,500	86,890	72,420	58,750	-
110°F Ambient	K*BV022L4A*	4GE-23	88,940	78,670	68,640	59,020	49,920	42,040	34,470	27,650	-
	K*BV027L4A*	6HE-28	113,680	99,240	85,820	73,280	61,280	50,600	40,610	31,810	-
	K*BV030L4A*	6GE-34	132,590	117,330	102,420	89,030	75,700	63,830	52,820	42,580	-
	K*BV040L4A*	6FE-44	157,620	138,700	121,780	104,390	89,430	74,890	61,380	49,140	-

CAPACITY DATA (BTUH)

LOW TEMPERATURE R404A BITZER // SINGLE COMPRESSOR // 60 HZ‡

Model No.		Comp. Model No.	Suction Temperature (°F)								
			0°	-5°	-10°	-15°	-20°	-25°	-30°	-35°	-40°
90°F Ambient	K*BV022L4A*	4GE-23	135,500	123,600	110,600	99,100	88,400	77,400	67,400	59,000	50,900
	K*BV027L4A*	6HE-28	173,600	157,700	140,700	125,800	111,800	97,400	84,400	73,200	63,000
	K*BV030L4A*	6GE-34	203,100	185,200	166,500	149,400	133,300	117,700	103,100	90,600	78,900
	K*BV040L4A*	6FE-44	239,800	219,200	196,700	175,700	157,600	138,600	121,100	105,600	91,600
95°F Ambient	K*BV022L4A*	4GE-23	128,200	116,500	104,300	93,300	82,700	72,600	63,100	55,200	47,400
	K*BV027L4A*	6HE-28	164,300	148,700	132,600	118,400	104,600	91,400	79,000	68,500	58,700
	K*BV030L4A*	6GE-34	192,300	175,000	157,200	140,900	125,500	110,700	96,700	84,800	73,500
	K*BV040L4A*	6FE-44	224,000	202,100	183,000	165,100	148,500	131,900	116,300	100,900	85,800
100°F Ambient	K*BV022L4A*	4GE-23	120,900	109,800	98,000	87,500	77,800	67,800	58,800	51,300	43,700
	K*BV027L4A*	6HE-28	154,900	140,000	124,700	111,100	98,400	85,300	73,700	63,600	54,100
	K*BV030L4A*	6GE-34	181,500	165,100	147,900	132,400	117,700	103,500	90,300	79,000	68,300
	K*BV040L4A*	6FE-44	212,300	192,100	172,200	154,400	139,500	123,300	107,900	93,400	78,000
110°F Ambient	K*BV022L4A*	4GE-23	106,400	96,100	85,500	75,900	67,100	58,400	50,400	43,700	37,300
	K*BV027L4A*	6HE-28	136,400	122,600	108,800	96,300	84,900	73,500	63,100	54,200	46,100
	K*BV030L4A*	6GE-34	160,000	145,000	129,600	115,400	102,200	89,400	77,600	67,500	59,500
	K*BV040L4A*	6FE-44	188,300	170,100	151,000	135,400	119,600	104,900	91,500	78,100	64,200

LOW TEMPERATURE R407A, R407F BITZER // SINGLE COMPRESSOR // 60 HZ‡

Model No.		Comp. Model No.	Suction Temperature (°F)								
			0°	-5°	-10°	-15°	-20°	-25°	-30°	-35°	-40°
90°F Ambient	K*BV022L4A*	4GE-23	122,300	109,500	96,100	83,200	73,100	61,800	51,600	43,000	34,300
	K*BV027L4A*	6HE-28	148,000	132,400	116,000	100,200	87,500	73,600	60,900	49,400	40,000
	K*BV030L4A*	6GE-34	165,600	148,500	130,600	113,200	99,300	84,300	69,500	58,000	46,400
	K*BV040L4A*	6FE-44	212,800	189,900	166,700	145,400	126,100	106,300	88,200	74,700	61,700
95°F Ambient	K*BV022L4A*	4GE-23	116,600	104,000	91,100	78,800	68,900	58,100	48,300	40,100	32,400
	K*BV027L4A*	6HE-28	140,600	125,400	109,600	94,400	82,300	68,900	56,400	45,800	36,100
	K*BV030L4A*	6GE-34	157,000	139,300	123,400	106,800	93,400	78,500	65,600	54,300	44,200
	K*BV040L4A*	6FE-44	204,400	182,200	159,400	138,800	119,500	100,800	82,800	68,900	54,800
100°F Ambient	K*BV022L4A*	4GE-23	110,400	98,600	86,300	74,500	64,900	54,600	45,100	36,900	29,300
	K*BV027L4A*	6HE-28	133,200	118,400	103,200	88,800	77,000	64,100	52,600	41,700	32,300
	K*BV030L4A*	6GE-34	149,200	133,200	116,400	100,400	87,500	73,200	60,100	49,400	38,400
	K*BV040L4A*	6FE-44	194,200	172,600	150,500	129,600	112,100	94,300	77,600	63,000	49,300
110°F Ambient	K*BV022L4A*	4GE-23	99,400	88,300	76,600	65,700	57,000	47,500	38,900	30,400	23,400
	K*BV027L4A*	6HE-28	118,800	105,200	91,100	78,400	66,800	55,000	44,400	34,400	26,200
	K*BV030L4A*	6GE-34	133,000	118,400	102,800	87,900	76,000	63,000	51,500	40,700	30,500
	K*BV040L4A*	6FE-44	175,600	155,600	134,300	115,000	97,700	81,400	66,000	52,500	39,600

* Each asterisk represents a variable character based upon model and voltage ordered. See page 3 for nomenclature.

All capacities are calculated at 65°F return gas temperature and dew point values.

‡ Multiply capacity by .83 when used with 50 Hz power.

CAPACITY DATA (BTUH)

LOW TEMPERATURE R448A, R449A/B BITZER // SINGLE COMPRESSOR // 60 HZ‡

	Model No.	Comp. Model No.	Suction Temperature (°F)								
			0°	-5°	-10°	-15°	-20°	-25°	-30°	-35°	-40°
90°F Ambient	K*BV022L4A*	4GE-23	128,400	116,000	103,000	91,000	80,200	69,200	59,200	50,500	40,000
	K*BV027L4A*	6HE-28	155,200	140,200	124,100	109,400	96,500	83,100	71,400	60,300	48,300
	K*BV030L4A*	6GE-34	188,900	173,900	154,100	137,400	122,800	108,000	92,000	80,200	62,900
	K*BV040L4A*	6FE-44	227,900	206,400	183,200	161,800	143,600	123,600	106,100	91,500	77,000
95°F Ambient	K*BV022L4A*	4GE-23	122,400	110,200	97,600	86,200	75,600	65,100	55,400	47,100	37,800
	K*BV027L4A*	6HE-28	147,400	132,800	117,300	103,100	90,800	77,800	66,100	55,900	43,600
	K*BV030L4A*	6GE-34	179,100	163,100	145,600	129,600	115,500	100,600	86,800	75,100	59,900
	K*BV040L4A*	6FE-44	218,900	198,000	175,200	154,500	136,100	117,200	99,600	84,400	68,400
100°F Ambient	K*BV022L4A*	4GE-23	115,900	104,500	92,500	81,500	71,200	61,200	51,700	43,300	–
	K*BV027L4A*	6HE-28	139,600	125,400	110,500	97,000	85,000	72,400	61,600	50,900	–
	K*BV030L4A*	6GE-34	170,200	156,000	137,300	121,800	108,200	93,800	79,500	68,300	–
	K*BV040L4A*	6FE-44	208,000	187,600	165,400	144,300	127,700	109,600	93,300	77,200	–
110°F Ambient	K*BV022L4A*	4GE-23	104,300	93,600	82,100	71,900	62,500	53,200	44,600	35,700	–
	K*BV027L4A*	6HE-28	124,500	111,400	97,500	85,600	73,700	62,100	52,000	42,000	–
	K*BV030L4A*	6GE-34	151,700	138,600	121,300	106,700	94,000	80,700	68,100	56,300	–
	K*BV040L4A*	6FE-44	188,100	169,100	147,600	128,000	111,300	94,600	79,400	64,300	–

* Each asterisk represents a variable character based upon model and voltage ordered. See page 3 for nomenclature.
All capacities are calculated at 65°F return gas temperature and dew point values.
‡ Multiply capacity by .83 when used with 50 Hz power.

CAPACITY DATA (BTUH)

LOW TEMPERATURE R454A BITZER // DUAL & PARALLEL COMPRESSORS // 60 HZ‡

	Model No.	Comp. Model No.	Suction Temperature (°F)								
			0°	-5°	-10°	-15°	-20°	-25°	-30°	-35°	-40°
90°F Ambient	K*BD044L4A*	(2) 4GE-23	247,280	220,100	194,960	171,120	149,180	128,740	109,720	91,740	74,260
	K*BD054L4A*	(2) 6HE-28	306,980	275,060	243,360	213,340	186,640	160,660	136,300	112,880	91,160
	K*BD060L4A*	(2) 6GE-34	374,540	336,100	299,060	264,220	231,900	201,300	173,400	146,140	119,860
	K*BD080L4A*	(2) 6FE-44	453,060	406,800	363,120	321,800	283,520	246,740	213,460	180,740	149,220
95°F Ambient	K*BD044L4A*	(2) 4GE-23	234,960	209,180	184,220	162,060	140,740	120,520	102,840	85,180	70,080
	K*BD054L4A*	(2) 6HE-28	293,560	261,840	231,320	202,660	176,320	151,260	128,140	105,960	86,300
	K*BD060L4A*	(2) 6GE-34	358,040	320,780	285,100	251,580	220,340	190,460	163,500	137,040	113,560
	K*BD080L4A*	(2) 6FE-44	433,540	389,200	346,700	307,100	269,860	234,800	201,780	170,940	142,840
100°F Ambient	K*BD044L4A*	(2) 4GE-23	223,240	198,580	174,300	152,680	132,080	113,520	95,540	79,060	-
	K*BD054L4A*	(2) 6HE-28	279,260	248,660	219,860	192,440	166,540	142,380	119,940	98,540	-
	K*BD060L4A*	(2) 6GE-34	341,800	305,040	270,680	238,800	208,820	179,820	153,580	127,780	-
	K*BD080L4A*	(2) 6FE-44	414,140	370,520	330,560	291,640	255,820	221,700	189,820	159,240	-
110°F Ambient	K*BD044L4A*	(2) 4GE-23	199,880	176,280	153,640	133,500	114,920	97,580	81,540	67,660	-
	K*BD054L4A*	(2) 6HE-28	251,840	223,220	195,460	170,260	146,760	123,960	102,920	83,780	-
	K*BD060L4A*	(2) 6GE-34	309,380	275,620	244,040	213,420	185,460	158,780	134,160	111,220	-
	K*BD080L4A*	(2) 6FE-44	375,380	335,920	298,100	262,020	228,660	197,440	166,660	139,060	-

Additional Compressor Cooling Required

* Each asterisk represents a variable character based upon model and voltage ordered. See page 3 for nomenclature.

All capacities are calculated at 65°F return gas temperature and dew point values.

‡ Multiply capacity by .83 when used with 50 Hz power.

CAPACITY DATA (BTUH)

LOW TEMPERATURE R454C BITZER // DUAL & PARALLEL COMPRESSORS // 60 HZ‡

	Model No.	Parallel Model No.	Comp. Model No.	Suction Temperature (°F)								
				0°	-5°	-10°	-15°	-20°	-25°	-30°	-35°	-40°
90°F Ambient	K*BD044L4A*	K*BP044L4A*	(2) 4GE-23	214,560	190,360	167,720	145,840	126,160	107,640	90,700	74,720	60,000
	K*BD054L4A*	K*BP054L4A*	(2) 6HE-28	278,060	246,220	216,300	188,820	162,800	138,380	116,200	95,520	76,420
	K*BD060L4A*	K*BP060L4A*	(2) 6GE-34	314,820	281,240	248,020	217,760	188,820	162,640	137,840	114,540	92,540
	K*BD080L4A*	K*BP080L4A*	(2) 6FE-44	376,240	334,680	295,900	259,200	224,400	192,600	162,620	133,940	106,900
95°F Ambient	K*BD044L4A*	K*BP044L4A*	(2) 4GE-23	204,060	181,600	159,460	139,080	119,380	101,720	85,080	69,880	55,900
	K*BD054L4A*	K*BP054L4A*	(2) 6HE-28	265,400	234,580	205,320	178,840	153,500	130,120	108,360	88,680	70,460
	K*BD060L4A*	K*BP060L4A*	(2) 6GE-34	300,660	267,780	235,460	207,680	179,680	153,840	130,380	107,740	86,880
	K*BD080L4A*	K*BP080L4A*	(2) 6FE-44	357,940	318,960	281,700	246,500	213,460	181,960	152,760	125,400	99,720
100°F Ambient	K*BD044L4A*	K*BP044L4A*	(2) 4GE-23	194,160	172,320	151,380	130,800	112,660	95,820	80,100	65,420	-
	K*BD054L4A*	K*BP054L4A*	(2) 6HE-28	251,620	221,860	194,360	168,520	144,080	121,780	100,940	81,760	-
	K*BD060L4A*	K*BP060L4A*	(2) 6GE-34	286,560	254,000	224,780	196,620	169,480	145,320	122,820	100,780	-
	K*BD080L4A*	K*BP080L4A*	(2) 6FE-44	340,920	303,020	267,240	232,760	200,800	171,120	143,280	116,640	-
110°F Ambient	K*BD044L4A*	K*BP044L4A*	(2) 4GE-23	174,980	154,040	134,520	115,900	99,140	83,820	69,300	56,100	-
	K*BD054L4A*	K*BP054L4A*	(2) 6HE-28	225,020	197,600	171,580	147,480	124,660	104,120	85,060	67,680	-
	K*BD060L4A*	K*BP060L4A*	(2) 6GE-34	257,200	227,820	200,660	174,900	150,380	127,400	106,520	86,740	-
	K*BD080L4A*	K*BP080L4A*	(2) 6FE-44	305,940	271,260	238,260	206,500	176,880	149,400	123,960	100,000	-

Additional Compressor Cooling Required

* Each asterisk represents a variable character based upon model and voltage ordered. See page 3 for nomenclature.

All capacities are calculated at 65°F return gas temperature and dew point values.

‡ Multiply capacity by .83 when used with 50 Hz power.

CAPACITY DATA (BTUH)

LOW TEMPERATURE R455A BITZER // DUAL & PARALLEL COMPRESSORS // 60 HZ‡

	Model No.	Parallel Model No.	Comp. Model No.	Suction Temperature (°F)								
				0°	-5°	-10°	-15°	-20°	-25°	-30°	-35°	-40°
90°F Ambient	K*BD044L4A*	K*BP044L4A*	(2) 4GE-23	222,180	196,760	172,860	150,440	129,620	110,180	92,460	75,900	61,140
	K*BD054L4A*	K*BP054L4A*	(2) 6HE-28	282,360	249,380	217,880	189,060	162,120	136,920	113,560	92,540	73,520
	K*BD060L4A*	K*BP060L4A*	(2) 6GE-34	326,440	290,320	256,920	225,080	195,560	166,960	141,380	117,100	94,760
	K*BD080L4A*	K*BP080L4A*	(2) 6FE-44	387,820	347,100	306,660	267,860	231,980	197,440	165,620	135,800	109,100
95°F Ambient	K*BD044L4A*	K*BP044L4A*	(2) 4GE-23	211,700	186,780	164,380	142,380	122,220	103,700	86,720	71,220	56,540
	K*BD054L4A*	K*BP054L4A*	(2) 6HE-28	269,140	236,940	206,860	178,600	152,500	128,260	105,940	85,620	67,120
	K*BD060L4A*	K*BP060L4A*	(2) 6GE-34	311,600	276,940	244,440	213,820	184,460	157,700	132,320	109,120	87,980
	K*BD080L4A*	K*BP080L4A*	(2) 6FE-44	367,640	329,340	290,720	253,340	218,260	186,340	155,340	126,840	101,160
100°F Ambient	K*BD044L4A*	K*BP044L4A*	(2) 4GE-23	201,000	177,860	154,640	133,960	115,080	97,060	80,760	65,880	-
	K*BD054L4A*	K*BP054L4A*	(2) 6HE-28	254,720	224,460	195,120	167,380	142,520	119,140	97,700	78,360	-
	K*BD060L4A*	K*BP060L4A*	(2) 6GE-34	295,900	262,700	231,460	201,600	173,900	147,720	123,800	101,340	-
	K*BD080L4A*	K*BP080L4A*	(2) 6FE-44	352,100	313,100	274,540	238,880	205,000	173,780	144,840	117,500	-
110°F Ambient	K*BD044L4A*	K*BP044L4A*	(2) 4GE-23	177,880	157,340	137,280	118,040	99,840	84,080	68,940	55,300	-
	K*BD054L4A*	K*BP054L4A*	(2) 6HE-28	227,360	198,480	171,640	146,560	122,560	101,200	81,220	63,620	-
	K*BD060L4A*	K*BP060L4A*	(2) 6GE-34	265,180	234,660	204,840	178,060	151,400	127,660	105,640	85,160	-
	K*BD080L4A*	K*BP080L4A*	(2) 6FE-44	315,240	277,400	243,560	208,780	178,860	149,780	122,760	98,280	-

Additional Compressor Cooling Required

* Each asterisk represents a variable character based upon model and voltage ordered. See page 3 for nomenclature.

All capacities are calculated at 65°F return gas temperature and dew point values.

‡ Multiply capacity by .83 when used with 50 Hz power.

CAPACITY DATA (BTUH)

LOW TEMPERATURE R404A BITZER // DUAL & PARALLEL COMPRESSORS // 60 HZ‡

	Model No.	Parallel Model No.	Comp. Model No.	Suction Temperature (°F)								
				0°	-5°	-10°	-15°	-20°	-25°	-30°	-35°	-40°
90°F Ambient	K*BD044L4A*	K*BP044L4A*	(2) 4GE-23	271,000	247,200	221,200	198,200	176,800	154,800	134,800	118,000	101,800
	K*BD054L4A*	K*BP054L4A*	(2) 6HE-28	347,200	315,400	281,400	251,600	223,600	194,800	168,800	146,400	126,000
	K*BD060L4A*	K*BP060L4A*	(2) 6GE-34	406,200	370,400	333,000	298,800	266,600	235,400	206,200	181,200	157,800
	K*BD080L4A*	K*BP080L4A*	(2) 6FE-44	479,600	438,400	393,400	351,400	315,200	277,200	242,200	211,200	183,200
95°F Ambient	K*BD044L4A*	K*BP044L4A*	(2) 4GE-23	256,400	233,000	208,600	186,600	165,400	145,200	126,200	110,400	94,800
	K*BD054L4A*	K*BP054L4A*	(2) 6HE-28	328,600	297,400	265,200	236,800	209,200	182,800	158,000	137,000	117,400
	K*BD060L4A*	K*BP060L4A*	(2) 6GE-34	384,600	350,000	314,400	281,800	251,000	221,400	193,400	169,600	147,000
	K*BD080L4A*	K*BP080L4A*	(2) 6FE-44	448,000	404,200	366,000	330,200	297,000	263,800	232,600	201,800	171,600
100°F Ambient	K*BD044L4A*	K*BP044L4A*	(2) 4GE-23	241,800	219,600	196,000	175,000	155,600	135,600	117,600	102,600	87,400
	K*BD054L4A*	K*BP054L4A*	(2) 6HE-28	309,800	280,000	249,400	222,200	196,800	170,600	147,400	127,200	108,200
	K*BD060L4A*	K*BP060L4A*	(2) 6GE-34	363,000	330,200	295,800	264,800	235,400	207,000	180,600	158,000	136,600
	K*BD080L4A*	K*BP080L4A*	(2) 6FE-44	424,600	384,200	344,400	308,800	279,000	246,600	215,800	186,800	156,000
110°F Ambient	K*BD044L4A*	K*BP044L4A*	(2) 4GE-23	212,800	192,200	171,000	151,800	134,200	116,800	100,800	87,400	74,600
	K*BD054L4A*	K*BP054L4A*	(2) 6HE-28	272,800	245,200	217,600	192,600	169,800	147,000	126,200	108,400	92,200
	K*BD060L4A*	K*BP060L4A*	(2) 6GE-34	320,000	290,000	259,200	230,800	204,400	178,800	155,200	135,000	119,000
	K*BD080L4A*	K*BP080L4A*	(2) 6FE-44	376,600	340,200	302,000	270,800	239,200	209,800	183,000	156,200	128,400

LOW TEMPERATURE R407A, R407F BITZER // DUAL & PARALLEL COMPRESSORS // 60 HZ‡

	Model No.	Parallel Model No.	Comp. Model No.	Suction Temperature (°F)								
				0°	-5°	-10°	-15°	-20°	-25°	-30°	-35°	-40°
90°F Ambient	K*BD044L4A*	K*BP044L4A*	(2) 4GE-23	244,600	219,000	192,200	166,400	146,200	123,600	103,200	86,000	68,600
	K*BD054L4A*	K*BP054L4A*	(2) 6HE-28	296,000	264,800	232,000	200,400	175,000	147,200	121,800	98,800	80,000
	K*BD060L4A*	K*BP060L4A*	(2) 6GE-34	331,200	297,000	261,200	226,400	198,600	168,600	139,000	116,000	92,800
	K*BD080L4A*	K*BP080L4A*	(2) 6FE-44	425,600	379,800	333,400	290,800	252,200	212,600	176,400	149,400	123,400
95°F Ambient	K*BD044L4A*	K*BP044L4A*	(2) 4GE-23	233,200	208,000	182,200	157,600	137,800	116,200	96,600	80,200	64,800
	K*BD054L4A*	K*BP054L4A*	(2) 6HE-28	281,200	250,800	219,200	188,800	164,600	137,800	112,800	91,600	72,200
	K*BD060L4A*	K*BP060L4A*	(2) 6GE-34	314,000	278,600	246,800	213,600	186,800	157,000	131,200	108,600	88,400
	K*BD080L4A*	K*BP080L4A*	(2) 6FE-44	408,800	364,400	318,800	277,600	239,000	201,600	165,600	137,800	109,600
100°F Ambient	K*BD044L4A*	K*BP044L4A*	(2) 4GE-23	220,800	197,200	172,600	149,000	129,800	109,200	90,200	73,800	58,600
	K*BD054L4A*	K*BP054L4A*	(2) 6HE-28	266,400	236,800	206,400	177,600	154,000	128,200	105,200	83,400	64,600
	K*BD060L4A*	K*BP060L4A*	(2) 6GE-34	298,400	266,400	232,800	200,800	175,000	146,400	120,200	98,800	76,800
	K*BD080L4A*	K*BP080L4A*	(2) 6FE-44	388,400	345,200	301,000	259,200	224,200	188,600	155,200	126,000	98,600
110°F Ambient	K*BD044L4A*	K*BP044L4A*	(2) 4GE-23	198,800	176,600	153,200	131,400	114,000	95,000	77,800	60,800	46,800
	K*BD054L4A*	K*BP054L4A*	(2) 6HE-28	237,600	210,400	182,200	156,800	133,600	110,000	88,800	68,800	52,400
	K*BD060L4A*	K*BP060L4A*	(2) 6GE-34	266,000	236,800	205,600	175,800	152,000	126,000	103,000	81,400	61,000
	K*BD080L4A*	K*BP080L4A*	(2) 6FE-44	351,200	311,200	268,600	230,000	195,400	162,800	132,000	105,000	79,200

* Each asterisk represents a variable character based upon model and voltage ordered. See page 3 for nomenclature.

All capacities are calculated at 65°F return gas temperature and dew point values.

‡ Multiply capacity by .83 when used with 50 Hz power.

CAPACITY DATA (BTUH)

LOW TEMPERATURE R448A, R449A/B BITZER // DUAL & PARALLEL COMPRESSORS // 60 HZ‡

	Model No.	Parallel Model No.	Comp. Model No.	Suction Temperature (°F)								
				0°	-5°	-10°	-15°	-20°	-25°	-30°	-35°	-40°
90°F Ambient	K*BD044L4A*	K*BP044L4A*	(2) 4GE-23	256,800	232,000	206,000	182,000	160,400	138,400	118,400	101,000	80,000
	K*BD054L4A*	K*BP054L4A*	(2) 6HE-28	310,400	280,400	248,200	218,800	193,000	166,200	142,800	120,600	96,600
	K*BD060L4A*	K*BP060L4A*	(2) 6GE-34	377,800	347,800	308,200	274,800	245,600	216,000	184,000	160,400	125,800
	K*BD080L4A*	K*BP080L4A*	(2) 6FE-44	455,800	412,800	366,400	323,600	287,200	247,200	212,200	183,000	154,000
95°F Ambient	K*BD044L4A*	K*BP044L4A*	(2) 4GE-23	244,800	220,400	195,200	172,400	151,200	130,200	110,800	94,200	75,600
	K*BD054L4A*	K*BP054L4A*	(2) 6HE-28	294,800	265,600	234,600	206,200	181,600	155,600	132,200	111,800	87,200
	K*BD060L4A*	K*BP060L4A*	(2) 6GE-34	358,200	326,200	291,200	259,200	231,000	201,200	173,600	150,200	119,800
	K*BD080L4A*	K*BP080L4A*	(2) 6FE-44	437,800	396,000	350,400	309,000	272,200	234,400	199,200	168,800	136,800
100°F Ambient	K*BD044L4A*	K*BP044L4A*	(2) 4GE-23	231,800	209,000	185,000	163,000	142,400	122,400	103,400	86,600	–
	K*BD054L4A*	K*BP054L4A*	(2) 6HE-28	279,200	250,800	221,000	194,000	170,000	144,800	123,200	101,800	–
	K*BD060L4A*	K*BP060L4A*	(2) 6GE-34	340,400	312,000	274,600	243,600	216,400	187,600	159,000	136,600	–
	K*BD080L4A*	K*BP080L4A*	(2) 6FE-44	416,000	375,200	330,800	288,600	255,400	219,200	186,600	154,400	–
110°F Ambient	K*BD044L4A*	K*BP044L4A*	(2) 4GE-23	208,600	187,200	164,200	143,800	125,000	106,400	89,200	71,400	–
	K*BD054L4A*	K*BP054L4A*	(2) 6HE-28	249,000	222,800	195,000	171,200	147,400	124,200	104,000	84,000	–
	K*BD060L4A*	K*BP060L4A*	(2) 6GE-34	303,400	277,200	242,600	213,400	188,000	161,400	136,200	112,600	–
	K*BD080L4A*	K*BP080L4A*	(2) 6FE-44	376,200	338,200	295,200	256,000	222,600	189,200	158,800	128,600	–

* Each asterisk represents a variable character based upon model and voltage ordered. See page 3 for nomenclature.

All capacities are calculated at 65°F return gas temperature and dew point values.

‡ Multiply capacity by .83 when used with 50 Hz power.

ADDITIONAL COMPRESSOR COOLING GRAPH

MEDIUM TEMPERATURE MODELS

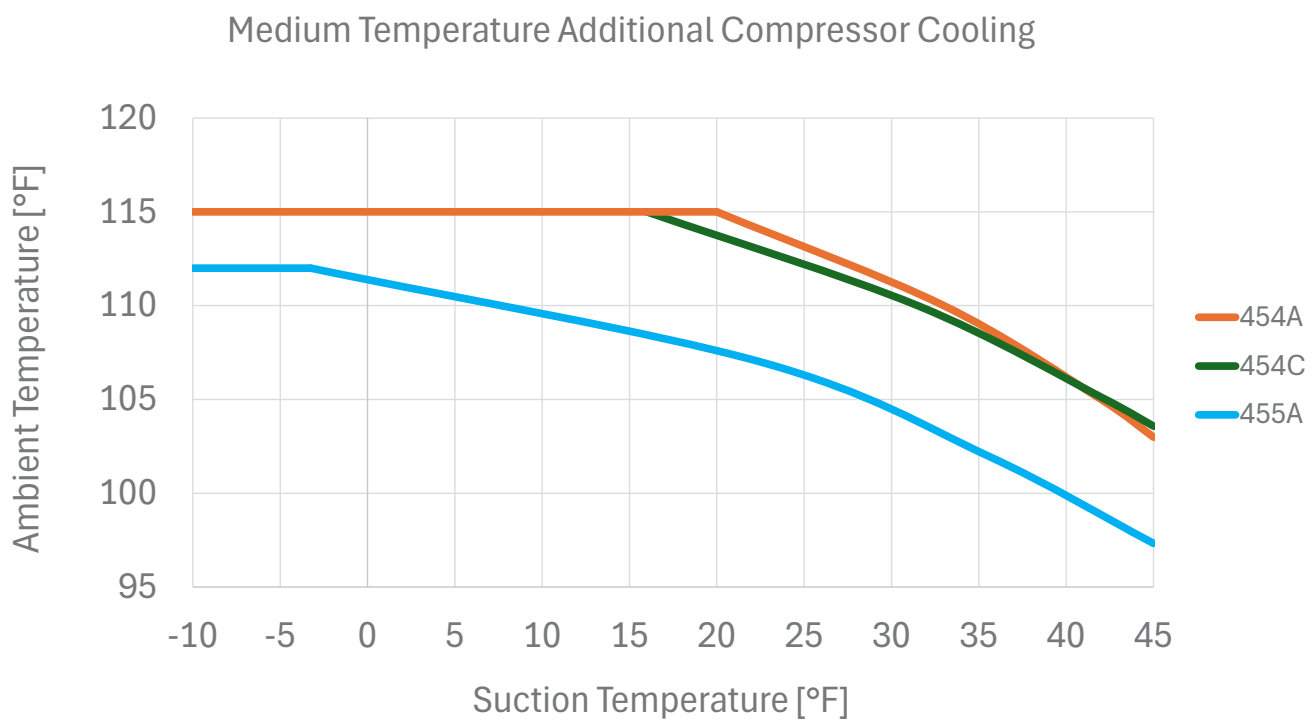

Additional compressor cooling is recommended for ambients above the lines shown.

- Additional compressor cooling option includes liquid injection (TREV), suction accumulator, and insulated suction line components and piping.

ADDITIONAL COMPRESSOR COOLING GRAPH

LOW TEMPERATURE MODELS

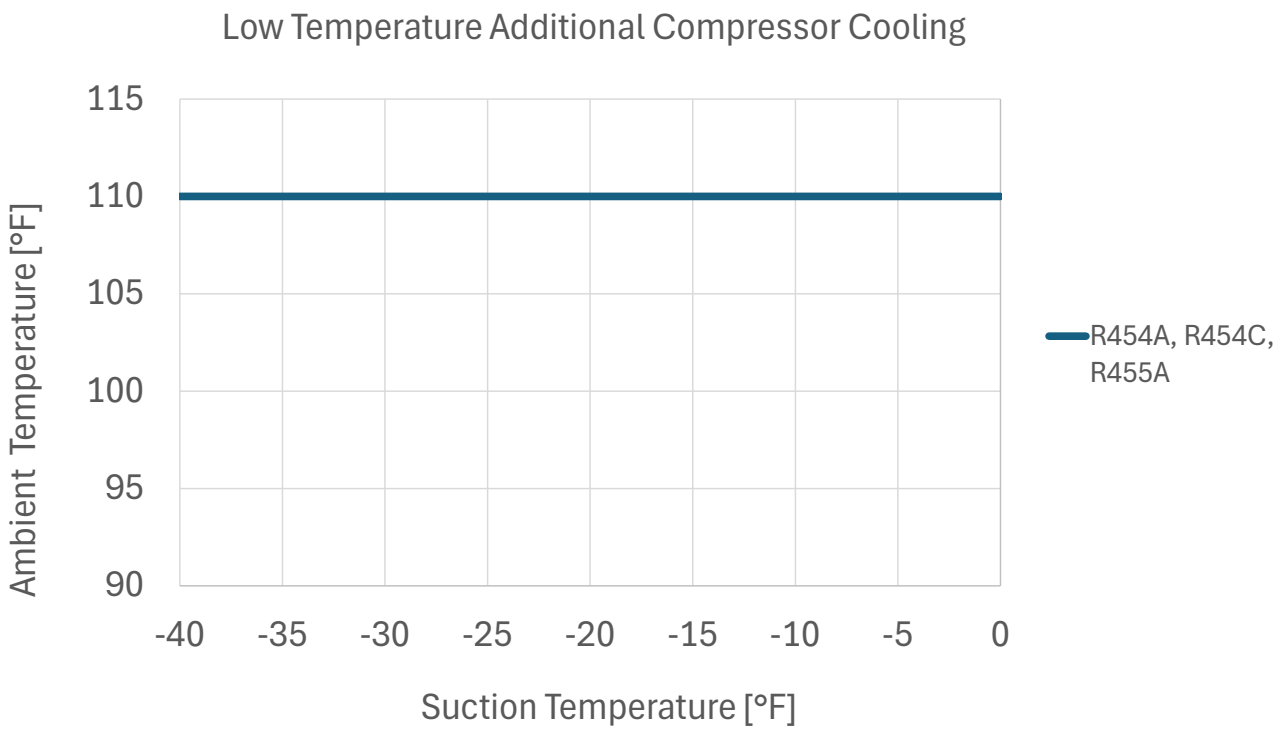

Additional compressor cooling is recommended for ambients above the lines shown.

- Additional compressor cooling option includes insulated suction line components and piping.

ELECTRICAL SPECIFICATIONS

BITZER // SINGLE COMPRESSOR MODELS

	Base Model No.	Comp. Model No.	Compressor			Cond. Fan		Control Amps	Air Defrost/Remote	
			RLA	MCC	LRA^	Total Fan FLA	Qty.		MCA	MOPD
208-230V/3/60 Hz	K*BV015M4A*	4NE-20	57.7	90.0	352.0	13.0	2	2.0	87.1	125
	K*BV020M4A*	4JE-22	61.5	95.9	352.0	13.0	2	2.0	91.9	150
	K*BV025M4A*	4HE-25	75.6	117.9	436.0	13.0	2	2.0	109.5	175
	K*BV030M4A*	4GE-30	89.7	139.9	294.0^	13.0	2	2.0	127.1	200
	K*BV035M4A*	6HE-35	105.1	164.0	330.0^	19.5	3	2.0	152.9	250
	K*BV040M4A*	6GE-40	141.0	220.0	420.0^	19.5	3	2.0	197.8	300
	K*BV050M4A*	6FE-50	143.6	224.0	570.0^	19.5	3	2.0	201.0	300
	K*BV022L4A*	4GE-23	57.7	90.0	352.0	13.0	2	2.0	87.1	125
	K*BV027L4A*	6HE-28	77.6	121.1	490.0	13.0	2	2.0	112.0	175
	K*BV030L4A*	6GE-34	84.6	132.0	294.0^	13.0	2	2.0	120.8	200
	K*BV040L4A*	6FE-44	97.4	151.9	420.0^	13.0	2	2.0	136.8	225
460V/3/60 Hz	K*BV015M4A*	4NE-20	28.8	44.9	176.0	6.6	2	1.0	43.6	70
	K*BV020M4A*	4JE-22	30.8	48.0	176.0	6.6	2	1.0	46.1	70
	K*BV025M4A*	4HE-25	37.8	59.0	218.0	6.6	2	1.0	54.9	90
	K*BV030M4A*	4GE-30	44.9	70.0	245.0	6.6	2	1.0	63.7	100
	K*BV035M4A*	6HE-35	52.6	82.1	275.0	9.9	3	1.0	76.7	125
	K*BV040M4A*	6GE-40	70.5	110.0	350.0	9.9	3	1.0	99.0	150
	K*BV050M4A*	6FE-50	71.8	112.0	425.0	9.9	3	1.0	100.7	150
	K*BV022L4A*	4GE-23	28.8	44.9	176.0	6.6	2	1.0	43.6	70
	K*BV027L4A*	6HE-28	38.8	60.5	245.0	6.6	2	1.0	56.1	90
	K*BV030L4A*	6GE-34	42.3	66.0	245.0	6.6	2	1.0	60.5	100
	K*BV040L4A*	6FE-44	48.7	76.0	350.0	6.6	2	1.0	68.5	110

^ Model utilizes part winding start.

	Base Model No.	4 Contactor Defrost Kit					2 Contactor Defrost Kit					1 Contactor Defrost Kit				
		Kit Name	Fan Amps	Heater Amps	MCA	MOPD	Kit Name	Fan Amps	Heater Amps	MCA	MOPD	Kit Name	Fan Amps	Heater Amps	MCA	MOPD
208-230V/3/60 Hz	K*BV015M4A*	DLD96	24.0	96.0	122.0	150	DLB96	24.0	96.0	122.0	150	DLA48	15.0	48.0	102.1	150
	K*BV020M4A*	DLD96	24.0	96.0	122.0	175	DLB96	24.0	96.0	122.0	175	DLA48	15.0	48.0	106.9	150
	K*BV025M4A*	DLD192	24.0	192.0	242.0	250	DLB96	24.0	96.0	133.5	200	DLA48	15.0	48.0	124.5	200
	K*BV030M4A*	DLD192	24.0	192.0	242.0	250	DLB96	24.0	96.0	151.1	225	DLA48	15.0	48.0	142.1	225
	K*BV035M4A*	DLD192	24.0	192.0	242.0	250	DLB96	24.0	96.0	176.9	250	DLA48	15.0	48.0	167.9	250
	K*BV040M4A*	DLD192	24.0	192.0	242.0	350	DLB96	24.0	96.0	221.8	350	DLA48	15.0	48.0	212.8	350
	K*BV050M4A*	DLD192	24.0	192.0	242.0	350	DLB96	24.0	96.0	225.0	350	DLA48	15.0	48.0	216.0	350
	K*BV022L4A*	DLD96	24.0	96.0	122.0	150	DLB96	24.0	96.0	122.0	150	DLA48	15.0	48.0	102.1	150
	K*BV027L4A*	DLD96	24.0	96.0	136.0	200	DLB96	24.0	96.0	136.0	200	DLA48	15.0	48.0	127.0	200
	K*BV030L4A*	DLD144	24.0	144.0	182.0	225	DLB96	24.0	96.0	144.8	225	DLA48	15.0	48.0	135.8	200
	K*BV040L4A*	DLD144	24.0	144.0	182.0	250	DLB96	24.0	96.0	160.8	250	DLA48	15.0	48.0	151.8	225
460V/3/60 Hz	K*BV015M4A*	DLD60	24.0	60.0	76.0	90	DLB48	15.0	48.0	61.0	80	DLA24	15.0	24.0	58.6	80
	K*BV020M4A*	DLD60	24.0	60.0	76.0	100	DLB48	15.0	48.0	61.1	90	DLA48	15.0	48.0	61.1	90
	K*BV025M4A*	DLD96	24.0	96.0	121.0	125	DLB48	15.0	48.0	69.9	100	DLA48	15.0	48.0	69.9	100
	K*BV030M4A*	DLD96	24.0	96.0	121.0	125	DLB48	15.0	48.0	78.7	110	DLA48	15.0	48.0	78.7	110
	K*BV035M4A*	DLD96	24.0	96.0	121.0	150	DLB48	15.0	48.0	91.7	125	DLA48	15.0	48.0	91.7	125
	K*BV040M4A*	DLD96	24.0	96.0	123.0	175	DLB48	15.0	48.0	114.0	175	DLA48	15.0	48.0	114.0	175
	K*BV050M4A*	DLD96	24.0	96.0	124.7	175	DLB48	15.0	48.0	115.7	175	DLA48	15.0	48.0	115.7	175
	K*BV022L4A*	DLD60	24.0	60.0	76.0	90	DLB48	15.0	48.0	61.0	80	DLA48	15.0	48.0	61.0	80
	K*BV027L4A*	DLD60	24.0	60.0	80.1	110	DLB48	15.0	48.0	71.1	100	DLA48	15.0	48.0	71.1	100
	K*BV030L4A*	DLD96	24.0	96.0	121.0	125	DLB48	15.0	48.0	75.5	110	DLA48	15.0	48.0	75.5	110
	K*BV040L4A*	DLD96	24.0	96.0	121.0	125	DLB48	15.0	48.0	83.5	125	DLA48	15.0	48.0	83.5	125

* Each asterisk represents a variable character based upon model and voltage ordered. See page 3 for nomenclature.

ELECTRICAL SPECIFICATIONS

BITZER // DUAL COMPRESSOR MODELS

	Base Model No.	Comp. Model No.	Compressor			Cond. Fan		Control Amps	Air Defrost/Remote	
			RLA	MCC	LRA^	Total Fan FLA	QTY.		MCA	MOPD
208-230V/3/60 Hz	K*BD030M4A*	(2) 4NE-20	57.7	90.0	352.0	26.0	4	2.0	157.8	200
	K*BD040M4A*	(2) 4JE-22	61.5	95.9	352.0	26.0	4	2.0	166.4	225
	K*BD050M4A*	(2) 4HE-25	75.6	117.9	436.0	26.0	4	2.0	198.1	250
	K*BD060M4A*	(2) 4GE-30	89.7	139.9	294.0^	26.0	4	2.0	229.8	300
	K*BD070M4A*	(2) 6HE-35	105.1	164.0	330.0^	39.0	6	2.0	277.5	350
	K*BD080M4A*	(2) 6GE-40	141.0	220.0	420.0^	39.0	6	2.0	358.3	450
	K*BD100M4A*	(2) 6FE-50	143.6	224.0	570.0^	39.0	6	2.0	364.1	500
	K*BD044L4A*	(2) 4GE-23	57.7	90.0	352.0	13.0	2	2.0	144.8	200
	K*BD054L4A*	(2) 6HE-28	77.6	121.1	490.0	13.0	2	2.0	189.6	250
	K*BD060L4A*	(2) 6GE-34	84.6	132.0	294.0^	13.0	2	2.0	205.4	250
	K*BD080L4A*	(2) 6FE-44	97.4	151.9	420.0^	13.0	2	2.0	234.2	300
460V/3/60 Hz	K*BD030M4A*	(2) 4NE-20	28.8	44.9	176.0	13.2	4	1.0	79.0	100
	K*BD040M4A*	(2) 4JE-22	30.8	48.0	176.0	13.2	4	1.0	83.5	110
	K*BD050M4A*	(2) 4HE-25	37.8	59.0	218.0	13.2	4	1.0	99.3	125
	K*BD060M4A*	(2) 4GE-30	44.9	70.0	245.0	13.2	4	1.0	115.2	150
	K*BD070M4A*	(2) 6HE-35	52.6	82.1	275.0	19.8	6	1.0	139.2	175
	K*BD080M4A*	(2) 6GE-40	70.5	110.0	350.0	19.8	6	1.0	179.4	225
	K*BD100M4A*	(2) 6FE-50	71.8	112.0	425.0	19.8	6	1.0	162.6	225
	K*BD044L4A*	(2) 4GE-23	28.8	44.9	176.0	13.2	4	1.0	79.0	100
	K*BD054L4A*	(2) 6HE-28	38.8	60.5	245.0	13.2	4	1.0	101.5	125
	K*BD060L4A*	(2) 6GE-34	42.3	66.0	245.0	13.2	4	1.0	109.4	150
	K*BD080L4A*	(2) 6FE-44	48.7	76.0	350.0	13.2	4	1.0	123.8	150

^ Model utilizes part winding start.

	Base Model No.	2 Contactor Defrost Kit							1 Contactor Defrost Kit						
		Kit Name	Kit Fan Amps	Kit Heat Amps	Fan Amps	Total Heater Amps	MCA	MOPD	Kit Name	Kit Fan Amps	Kit Heat Amps	Fan Amps	Total Heater Amps	MCA	MOPD
208-230V/3/60 Hz	K*BD030M4A*	DLD96	24.0	96.0	48.0	192.0	242.0	250	DLB96	24.0	96.0	48.0	192.0	242.0	250
	K*BD040M4A*	DLD96	24.0	96.0	48.0	192.0	242.0	250	DLB96	24.0	96.0	48.0	192.0	242.0	250
	K*BD050M4A*	DLD192	24.0	192.0	48.0	384.0	482.0	500	DLB96	24.0	96.0	48.0	192.0	253.5	300
	K*BD060M4A*	DLD192	24.0	192.0	48.0	384.0	482.0	500	DLB96	24.0	96.0	48.0	192.0	277.8	350
	K*BD070M4A*	DLD192	24.0	192.0	48.0	384.0	482.0	500	DLB96	24.0	96.0	48.0	192.0	325.5	400
	K*BD080M4A*	DLD192	24.0	192.0	48.0	384.0	482.0	500	DLB96	24.0	96.0	48.0	192.0	406.3	500
	K*BD100M4A*	DLD192	24.0	192.0	48.0	384.0	482.0	500	DLB96	24.0	96.0	48.0	192.0	412.1	500
	K*BD044L4A*	DLD96	24.0	96.0	48.0	192.0	242.0	250	DLB96	24.0	96.0	48.0	192.0	242.0	250
	K*BD054L4A*	DLD96	24.0	96.0	48.0	192.0	249.5	300	DLB96	24.0	96.0	48.0	192.0	249.5	300
	K*BD060L4A*	DLD144	24.0	144.0	48.0	288.0	362.0	400	DLB96	24.0	96.0	48.0	192.0	258.3	300
	K*BD080L4A*	DLD144	24.0	144.0	48.0	288.0	362.0	400	DLB96	24.0	96.0	48.0	192.0	282.2	350
460V/3/60 Hz	K*BD030M4A*	DLD60	24.0	60.0	48.0	120.0	151.0	175	DLB35	15.0	35.0	30.0	70.0	109.0	125
	K*BD040M4A*	DLD60	24.0	60.0	48.0	120.0	151.0	175	DLB35	15.0	35.0	30.0	70.0	113.5	125
	K*BD050M4A*	DLD60	24.0	60.0	48.0	120.0	153.9	175	DLB35	15.0	35.0	30.0	70.0	129.3	150
	K*BD060M4A*	DLD60	24.0	60.0	48.0	120.0	163.2	200	DLB35	15.0	35.0	30.0	70.0	145.2	175
	K*BD070M4A*	DLD60	24.0	60.0	48.0	120.0	187.2	225	DLB35	15.0	35.0	30.0	70.0	169.2	200
	K*BD080M4A*	DLD60	24.0	60.0	48.0	120.0	227.4	250	DLB35	15.0	35.0	30.0	70.0	209.4	250
	K*BD100M4A*	DLD60	24.0	60.0	48.0	120.0	210.6	250	DLB35	15.0	35.0	30.0	70.0	192.6	250
	K*BD044L4A*	DLD60	24.0	60.0	48.0	120.0	151.0	175	DLB35	15.0	35.0	30.0	70.0	109.0	125
	K*BD054L4A*	DLD60	24.0	60.0	48.0	120.0	155.1	175	DLB35	15.0	35.0	30.0	70.0	131.5	150
	K*BD060L4A*	DLD60	24.0	60.0	48.0	120.0	159.5	175	DLB35	15.0	35.0	30.0	70.0	139.4	175
	K*BD080L4A*	DLD60	24.0	60.0	48.0	120.0	171.8	200	DLB35	15.0	35.0	30.0	70.0	153.8	200

* Each asterisk represents a variable character based upon model and voltage ordered. See page 3 for nomenclature.

ELECTRICAL SPECIFICATIONS

BITZER // PARALLEL COMPRESSOR MODELS

	Base Model No.	Comp. Model No.	Compressor			Cond. Fan		Control Amps	Air Defrost/Remote	
			RLA	MCC	LRA^	Total Fan FLA	QTY.		MCA	MOPD
208-230V/3/60 Hz	K*BP050M4A*	(2) 4HE-25	75.6	117.9	436.0	26.0	4	2.0	198.1	250
	K*BP060M4A*	(2) 4GE-30	89.7	139.9	294.0^	26.0	4	2.0	229.8	300
	K*BP070M4A*	(2) 6HE-35	105.1	164.0	330.0^	39.0	6	2.0	277.5	350
	K*BP080M4A*	(2) 6GE-40	141.0	220.0	420.0^	39.0	6	2.0	358.3	450
	K*BP100M4A*	(2) 6FE-50	143.6	224.0	570.0^	39.0	6	2.0	364.1	500
	K*BP044L4A*	(2) 4GE-23	57.7	90.0	352.0	13.0	2	2.0	144.8	200
	K*BP054L4A*	(2) 6HE-28	77.6	121.1	490.0	13.0	2	2.0	189.6	250
	K*BP060L4A*	(2) 6GE-34	84.6	132.0	294.0^	13.0	2	2.0	205.4	250
	K*BP080L4A*	(2) 6FE-44	97.4	151.9	420.0^	13.0	2	2.0	234.2	300
460V/3/60 Hz	K*BP050M4A*	(2) 4HE-25	37.8	59.0	218.0	13.2	4	1.0	99.3	125
	K*BP060M4A*	(2) 4GE-30	44.9	70.0	245.0	13.2	4	1.0	115.2	150
	K*BP070M4A*	(2) 6HE-35	52.6	82.1	275.0	19.8	6	1.0	139.2	175
	K*BP080M4A*	(2) 6GE-40	70.5	110.0	350.0	19.8	6	1.0	179.4	225
	K*BP100M4A*	(2) 6FE-50	71.8	112.0	425.0	19.8	6	1.0	182.4	250
	K*BP044L4A*	(2) 4GE-23	28.8	44.9	176.0	13.2	4	1.0	79.0	100
	K*BP054L4A*	(2) 6HE-28	38.8	60.5	245.0	13.2	4	1.0	101.5	125
	K*BP060L4A*	(2) 6GE-34	42.3	66.0	245.0	13.2	4	1.0	109.4	150
	K*BP080L4A*	(2) 6FE-44	48.7	76.0	350.0	13.2	4	1.0	123.8	150

^ Model utilizes part winding start.

	Base Model No.	4 Contactor Defrost Kit					2 Contactor Defrost Kit				
		Kit Name	Fan Amps	Heater Amps	MCA	MOPD	Kit Name	Fan Amps	Heater Amps	MCA	MOPD
208-230V/3/60 Hz	K*BP050M4A*	DLD192	24.0	192.0	242.0	250	DLB96	24.0	96.0	222.1	250
	K*BP060M4A*	DLD192	24.0	192.0	253.8	300	DLB96	24.0	96.0	253.8	300
	K*BP070M4A*	DLD192	24.0	192.0	301.5	400	DLB96	24.0	96.0	301.5	400
	K*BP080M4A*	DLD192	24.0	192.0	382.3	500	DLB96	24.0	96.0	382.3	500
	K*BP100M4A*	DLD192	24.0	192.0	388.1	500	DLB96	24.0	96.0	388.1	500
	K*BP044L4A*	DLD96	24.0	96.0	168.8	225	DLB60	15.0	60.0	159.8	200
	K*BP054L4A*	DLD96	24.0	96.0	213.6	250	DLB96	24.0	96.0	213.6	250
	K*BP060L4A*	DLD144	24.0	144.0	229.4	300	DLB96	24.0	96.0	229.4	300
	K*BP080L4A*	DLD144	24.0	144.0	258.2	350	DLB96	24.0	96.0	258.2	350
460V/3/60 Hz	K*BP050M4A*	DLD96	24.0	96.0	123.3	150	DLB48	15.0	48.0	114.3	150
	K*BP060M4A*	DLD96	24.0	96.0	139.2	175	DLB48	15.0	48.0	130.2	175
	K*BP070M4A*	DLD96	24.0	96.0	163.2	200	DLB48	15.0	48.0	154.2	200
	K*BP080M4A*	DLD96	24.0	96.0	203.4	250	DLB48	15.0	48.0	194.4	250
	K*BP100M4A*	DLD96	24.0	96.0	206.4	250	DLB48	15.0	48.0	197.4	250
	K*BP044L4A*	DLD60	24.0	60.0	103.0	125	DLB48	15.0	48.0	94.0	110
	K*BP054L4A*	DLD60	24.0	60.0	125.5	150	DLB48	15.0	48.0	116.5	150
	K*BP060L4A*	DLD60	24.0	60.0	133.4	175	DLB48	15.0	48.0	124.4	150
	K*BP080L4A*	DLD60	24.0	60.0	147.8	175	DLB48	15.0	48.0	138.8	175

* Each asterisk represents a variable character based upon model and voltage ordered. See page 3 for nomenclature. ^ Model utilizes part winding start.

DEFROST KIT NOMENCLATURE

DL	A	24	PP
DL	Heater Contactor Qty.	Max Total Heater Amp Value	Special Kit Codes
Defrost Kit Large Condenser	A: 1 Heater Contactor B: 2 Heater Contactors C: 3 Heater Contactors D: 4 Heater Contactors	30 = 30 amps total 48 = 48 amps total	PP = Pressure Prop Kits for Large Evaporators "-1" # of Evaps with Multiple Heater Feeds

When selecting defrost kit, use the next higher amp value above the defrost load.
All kits include 1 fan contactor and are suitable for 1 or 3 phase loads.
Electrical resistance loads greater than 48 amps must be split into multiple circuits.

DEFROST KITS // ALL MODELS

Single and Parallel Compressor Kit Options			
1 Contactor	2 Contactor	3 Contactor	4 Contactor
NONE	DLB35	DLC35	DLD60
TMR ONLY	DLB40	DLC40	DLD96
DLA24	DLB48	DLC48	DLD144
DLA30	DLB60	DLC60	DLD144-2
DLA35	DLB60-1	DLC96	DLD192-2
DLA40	DLB96	DLC144	DLD144-2
DLA48	DLB96-1	DLC60PP	DLD192-2
DLA24PP	DLB35PP	DLC96PP	DLD144-2PP
DLA30PP	DLB40PP	DLC144PP	DLD192-2PP
DLA35PP	DLB48PP		
DLA40PP	DLB60PP		
DLA48PP	DLB60-1PP		
	DLB96PP		
	DLB96-1PP		

Defrost Kit selected for Single and Parallel compressor models is for entire unit. Up to 4 contactors.

Dual Compressor Kit Options	
1 Contactor	2 Contactor
NONE	DLB35
TMR ONLY	DLB40
DLA24	DLB48
DLA30	DLB60
DLA35	DLB60-1
DLA40	DLB96
DLA48	DLB96-1
DLA24PP	DLB35PP
DLA30PP	DLB40PP
DLA35PP	DLB48PP
DLA40PP	DLB60PP
DLA48PP	DLB60-1PP
	DLB96PP
	DLB96-1PP

Defrost Kit selected is per compressor for Dual compressor models.
Up to 2 contactors/compressor.

SPECIFICATIONS // CONNECTIONS

SINGLE COMPRESSOR MODELS

Model No.	Comp. Model No.	HP	Cond. Fan Qty.	Connections (ODS)	
				Liquid	Suction^
K*DV015M4A*	3YS3R16ME	15	2	7/8	1-5/8
K*DV020M4A*	4YBNR19ME	20	2	7/8	2-1/8
K*DV025M4A*	4YHNR22ME	25	2	7/8	2-1/8
K*DV030M4A*	4YJNR27ME	30	2	1-1/8	2-1/8
K*DV035M4A*	6YHNR32ME	35	3	1-1/8	2-1/8
K*DV040M4A*	6YJNR39ME	40	3	1-1/8	2-1/8
K*DV050M4A*	6YUNR48ME	50	3	1-1/8	2-5/8
K*DV022L4A*	4YJNF59KE	22	2	7/8	2-1/8
K*DV027L4A*	6YHNF68KE	27	2	7/8	2-1/8
K*DV030L4A*	6YJNF84KE	30	2	7/8	2-1/8
K*DV040L4A*	6YUNF10ME	40	2	1-1/8	2-5/8

DUAL COMPRESSOR MODELS

Model No.	Comp. Model No.	HP	Cond. Fan Qty.	Connections (ODS)	
				Liquid	Suction^
K*DD030M4A*	(2) 3YS3R16ME	30	4	(2) 7/8	(2) 1-5/8
K*DD040M4A*	(2) 4YBNR19ME	40	4	(2) 7/8	(2) 2-1/8
K*DD050M4A*	(2) 4YHNR22ME	50	4	(2) 7/8	(2) 2-1/8
K*DD060M4A*	(2) 4YJNR27ME	60	4	(2) 1-1/8	(2) 2-1/8
K*DD070M4A*	(2) 6YHNR32ME	70	6	(2) 1-1/8	(2) 2-1/8
K*DD080M4A*	(2) 6YJNR39ME	80	6	(2) 1-1/8	(2) 2-1/8
K*DD100M4A*	(2) 6YUNR48ME	100	6	(2) 1-1/8	(2) 2-5/8
K*DD044L4A*	(2) 4YJNF59KE	44	4	(2) 7/8	(2) 2-1/8
K*DD054L4A*	(2) 6YHNF68KE	54	4	(2) 7/8	(2) 2-1/8
K*DD060L4A*	(2) 6YJNF84KE	60	4	(2) 7/8	(2) 2-1/8
K*DD080L4A*	(2) 6YUNF10ME	80	4	(2) 1-1/8	(2) 2-5/8

PARALLEL COMPRESSOR MODELS

Model No.	Comp. Model No.	HP	Cond. Fan Qty.	Connections (ODS)	
				Liquid	Suction^
K*DP050M4A*	(2) 4YHNR22ME	50	4	1-1/8	2-5/8
K*DP060M4A*	(2) 4YJNR27ME	60	4	1-3/8	2-5/8
K*DP070M4A*	(2) 6YHNR32ME	70	6	1-3/8	3-1/8
K*DP080M4A*	(2) 6YJNR39ME	80	6	1-5/8	3-1/8
K*DP100M4A*	(2) 6YUNR48ME	100	6	1-5/8	3-1/8
K*DP044L4A*	(2) 4YJNF59KE	44	4	1-1/8	3-1/8
K*DP054L4A*	(2) 6YHNF68KE	54	4	1-1/8	3-1/8
K*DP060L4A*	(2) 6YJNF84KE	60	4	1-1/8	3-1/8
K*DP080L4A*	(2) 6YUNF10ME	80	4	1-1/8	3-1/8

* Each asterisk represents a variable character based upon model and voltage ordered. See page 3 for nomenclature.

^ Connection size with or without factory installed liquid and/or suction line assembly

SPECIFICATIONS // RECEIVER CAPACITY

SINGLE COMPRESSOR MODELS

Model No.	90% R454A				90% R454C				90% R455A			
	Standard		Oversized		Standard		Oversized		Standard		Oversized	
	Flooded	Non-Flooded	Flooded	Non-Flooded	Flooded	Non-Flooded	Flooded	Non-Flooded	Flooded	Non-Flooded	Flooded	Non-Flooded
K*DV015M4A*	96	96	130	130	98	98	133	133	98	98	131	131
K*DV020M4A*	130	96	195	130	133	98	199	133	131	98	197	131
K*DV025M4A*	130	96	195	130	133	98	199	133	131	98	197	131
K*DV030M4A*	195	130	253	195	199	133	259	199	`197	131	257	197
K*DV035M4A*	195	130	253	195	199	133	259	199	197	131	257	197
K*DV040M4A*	195	130	253	195	199	133	259	199	197	131	257	197
K*DV050M4A*	253	195	362	253	259	199	370	259	257	197	367	257
K*DV022L4A*	96	96	130	130	98	98	133	133	98	98	131	131
K*DV027L4A*	130	96	195	130	133	98	199	133	131	98	197	131
K*DV030L4A*	130	96	195	130	133	98	199	133	131	98	197	131
K*DV040L4A*	195	130	253	195	199	133	259	199	197	131	257	197

DUAL COMPRESSOR MODELS

Model No.	90% R454A				90% R454C				90% R455A			
	Standard		Oversized		Standard		Oversized		Standard		Oversized	
	Flooded	Non-Flooded	Flooded	Non-Flooded	Flooded	Non-Flooded	Flooded	Non-Flooded	Flooded	Non-Flooded	Flooded	Non-Flooded
K*DD030M4A*	(2)96	(2) 96	(2) 130	(2) 130	(2) 98	(2) 98	(2) 133	(2) 133	(2) 98	(2) 98	(2) 131	(2) 131
K*DD040M4A*	(2) 130	(2) 96	(2) 195	(2) 130	(2) 133	(2) 98	(2) 199	(2) 133	(2) 131	(2) 98	(2) 197	(2) 131
K*DD050M4A*	(2) 130	(2) 96	(2) 195	(2) 130	(2) 133	(2) 98	(2) 199	(2) 133	(2) 131	(2) 98	(2) 197	(2) 131
K*DD060M4A*	(2) 195	(2) 130	(2) 253	(2) 195	(2) 199	(2) 133	(2) 259	(2) 199	(2) `197	(2) 131	(2) 257	(2) 197
K*DD070M4A*	(2) 195	(2) 130	(2) 253	(2) 195	(2) 199	(2) 133	(2) 259	(2) 199	(2) 197	(2) 131	(2) 257	(2) 197
K*DD080M4A*	(2) 195	(2) 130	(2) 253	(2) 195	(2) 199	(2) 133	(2) 259	(2) 199	(2) 197	(2) 131	(2) 257	(2) 197
K*DD100M4A*	(2) 253	(2) 195	(2) 362	(2) 253	(2) 259	(2) 199	(2) 370	(2) 259	(2) 257	(2) 197	(2) 367	(2) 257
K*DD044L4A*	(2) 96	(2) 96	(2) 130	(2) 130	(2) 98	(2) 98	(2) 133	(2) 133	(2) 98	(2) 98	(2) 131	(2) 131
K*DD054L4A*	(2) 130	(2) 96	(2) 195	(2) 130	(2) 133	(2) 98	(2) 199	(2) 133	(2) 131	(2) 98	(2) 197	(2) 131
K*DD060L4A*	(2) 130	(2) 96	(2) 195	(2) 130	(2) 133	(2) 98	(2) 199	(2) 133	(2) 131	(2) 98	(2) 197	(2) 131
K*DD080L4A*	(2) 195	(2) 130	(2) 253	(2) 195	(2) 199	(2) 133	(2) 259	(2) 199	(2) 197	(2) 131	(2) 257	(2) 197

PARALLEL COMPRESSOR MODELS

Model No.	90% R454A				90% R454C				90% R455A			
	Standard		Oversized		Standard		Oversized		Standard		Oversized	
	Flooded	Non-Flooded	Flooded	Non-Flooded	Flooded	Non-Flooded	Flooded	Non-Flooded	Flooded	Non-Flooded	Flooded	Non-Flooded
K*DP050M4A*	-	-	-	-	259	133	370	259	257	131	367	257
K*DP060M4A*	-	-	-	-	259	199	370	259	257	197	367	257
K*DP070M4A*	-	-	-	-	370	259	495	370	367	257	490	367
K*DP080M4A*	-	-	-	-	370	259	495	370	367	257	490	367
K*DP100M4A*	-	-	-	-	370	259	495	370	367	257	490	367
K*DP044L4A*	-	-	-	-	199	133	199	199	197	131	257	197
K*DP054L4A*	-	-	-	-	259	199	259	259	257	197	367	257
K*DP060L4A*	-	-	-	-	259	199	259	259	257	197	367	257
K*DP080L4A*	-	-	-	-	370	259	370	370	367	257	490	367

* Each asterisk represents a variable character based upon model and voltage ordered. See page 3 for nomenclature.

^ Connection size with or without factory installed liquid and/or suction line assembly

† Parallel compressor models not available in R454A.

SPECIFICATIONS // RECEIVER CAPACITY

SINGLE COMPRESSOR MODELS

Model No.	90% R404A				90% R407A, R407C, R407F				90% R448A, R449A, R499B			
	Standard		Oversized		Standard		Oversized		Standard		Oversized	
	Flooded	Non-Flooded	Flooded	Non-Flooded	Flooded	Non-Flooded	Flooded	Non-Flooded	Flooded	Non-Flooded	Flooded	Non-Flooded
K*DV015M4A*	99	99	133	133	109	109	146	146	103	103	139	139
K*DV020M4A*	133	99	200	133	146	109	219	146	139	103	209	139
K*DV025M4A*	133	99	200	133	146	109	219	146	139	103	209	139
K*DV030M4A*	200	133	261	200	219	146	286	219	209	139	272	209
K*DV035M4A*	200	133	261	200	219	146	286	219	209	139	272	209
K*DV040M4A*	200	133	261	200	219	146	286	219	209	139	272	209
K*DV050M4A*	261	200	373	261	286	219	404	286	272	209	389	272
K*DV022L4A*	99	99	133	133	109	109	146	146	103	103	139	139
K*DV027L4A*	133	99	200	133	146	109	219	146	139	103	209	139
K*DV030L4A*	133	99	200	133	146	109	219	146	139	103	209	139
K*DV040L4A*	200	133	261	200	219	146	286	219	209	139	272	209

DUAL COMPRESSOR MODELS

Model No.	90% R404A				90% R407A, R407C, R407F				90% R448A, R449A, R499B			
	Standard		Oversized		Standard		Oversized		Standard		Oversized	
	Flooded	Non-Flooded	Flooded	Non-Flooded	Flooded	Non-Flooded	Flooded	Non-Flooded	Flooded	Non-Flooded	Flooded	Non-Flooded
K*DD030M4A*	(2) 99	(2) 99	(2) 133	(2) 133	(2) 109	(2) 109	(2) 146	(2) 146	(2) 103	(2) 103	(2) 139	(2) 139
K*DD040M4A*	(2) 133	(2) 99	(2) 200	(2) 133	(2) 146	(2) 109	(2) 219	(2) 146	(2) 139	(2) 103	(2) 209	(2) 139
K*DD050M4A*	(2) 133	(2) 99	(2) 200	(2) 133	(2) 146	(2) 109	(2) 219	(2) 146	(2) 139	(2) 103	(2) 209	(2) 139
K*DD060M4A*	(2) 200	(2) 133	(2) 261	(2) 200	(2) 219	(2) 146	(2) 286	(2) 219	(2) 209	(2) 139	(2) 272	(2) 209
K*DD070M4A*	(2) 200	(2) 133	(2) 261	(2) 200	(2) 219	(2) 146	(2) 286	(2) 219	(2) 209	(2) 139	(2) 272	(2) 209
K*DD080M4A*	(2) 200	(2) 133	(2) 261	(2) 200	(2) 219	(2) 146	(2) 286	(2) 219	(2) 209	(2) 139	(2) 272	(2) 209
K*DD100M4A*	(2) 261	(2) 200	(2) 373	(2) 261	(2) 286	(2) 219	(2) 404	(2) 286	(2) 272	(2) 209	(2) 389	(2) 272
K*DD044L4A*	(2) 99	(2) 99	(2) 133	(2) 133	(2) 109	(2) 109	(2) 146	(2) 146	(2) 103	(2) 103	(2) 139	(2) 139
K*DD054L4A*	(2) 133	(2) 99	(2) 200	(2) 133	(2) 146	(2) 109	(2) 219	(2) 146	(2) 139	(2) 103	(2) 209	(2) 139
K*DD060L4A*	(2) 133	(2) 99	(2) 200	(2) 133	(2) 146	(2) 109	(2) 219	(2) 146	(2) 139	(2) 103	(2) 209	(2) 139
K*DD080L4A*	(2) 200	(2) 133	(2) 261	(2) 200	(2) 219	(2) 146	(2) 286	(2) 219	(2) 209	(2) 139	(2) 272	(2) 209

PARALLEL COMPRESSOR MODELS

Model No.	90% R404A				90% R407A, R407C, R407F				90% R448A, R449A, R499B			
	Standard		Oversized		Standard		Oversized		Standard		Oversized	
	Flooded	Non-Flooded	Flooded	Non-Flooded	Flooded	Non-Flooded	Flooded	Non-Flooded	Flooded	Non-Flooded	Flooded	Non-Flooded
K*DP050M4A*	261	200	373	261	286	219	404	286	272	209	389	272
K*DP060M4A*	261	200	373	261	286	219	404	286	272	209	389	272
K*DP070M4A*	373	261	500	373	404	286	542	404	389	272	520	389
K*DP080M4A*	373	261	500	373	404	286	542	404	389	272	520	389
K*DP100M4A*	373	261	500	373	404	286	542	404	389	272	520	389
K*DP044L4A*	200	133	261	200	219	146	286	219	209	139	272	209
K*DP054L4A*	261	200	373	261	286	219	404	286	272	209	389	272
K*DP060L4A*	261	200	373	261	286	219	404	286	272	209	389	272
K*DP080L4A*	373	261	500	373	404	286	542	404	389	272	520	389

* Each asterisk represents a variable character based upon model and voltage ordered. See page 3 for nomenclature.

^ Connection size with or without factory installed liquid and/or suction line assembly

† Parallel compressor models not available in R454A.

SPECIFICATIONS // PHYSICAL DATA

SINGLE COMPRESSOR MODELS

Model No.	Comp. Model No.	Fans Long	Dimensions (in.)			Approx. Ship Wt. (lbs.)	Sound Data dBA†
			H	W	L		
K*DV015M4A*	3YS3R16ME	2	58-1/8	45-3/8	159-1/4	1,875	71.9
K*DV020M4A*	4YBNR19ME	2	58-1/8	45-3/8	159-1/4	1,940	71.9
K*DV025M4A*	4YHNR22ME	2	58-1/8	45-3/8	159-1/4	1,940	71.9
K*DV030M4A*	4YJNR27ME	2	58-1/8	45-3/8	159-1/4	1,940	71.9
K*DV035M4A*	6YHNR32ME	3	58-1/8	45-3/8	207-1/4	2,440	74.9
K*DV040M4A*	6YJNR39ME	3	58-1/8	45-3/8	207-1/4	2,440	74.9
K*DV050M4A*	6YUNR48ME	3	58-1/8	45-3/8	207-1/4	2,540	74.9
K*DV022L4A*	4YJNF59KE	2	58-1/8	45-3/8	159-1/4	1,940	71.9
K*DV027L4A*	6YHNF68KE	2	58-1/8	45-3/8	159-1/4	2,040	71.9
K*DV030L4A*	6YJNF84KE	2	58-1/8	45-3/8	159-1/4	2,040	71.9
K*DV040L4A*	6YUNF10ME	2	58-1/8	45-3/8	159-1/4	2,040	71.9

DUAL COMPRESSOR MODELS

Model No.	Comp. Model No.	Fans Long	Dimensions (in.)			Approx. Ship Wt. (lbs.)	Sound Data dBA†
			H	W	L		
K*DD030M4A*	(2) 3YS3R16ME	2	58-1/8	90-7/8	159-1/4	3,660	78.4
K*DD040M4A*	(2) 4YBNR19ME	2	58-1/8	90-7/8	159-1/4	3,780	78.4
K*DD050M4A*	(2) 4YHNR22ME	2	58-1/8	90-7/8	159-1/4	3,780	78.4
K*DD060M4A*	(2) 4YJNR27ME	2	58-1/8	90-7/8	159-1/4	3,780	78.4
K*DD070M4A*	(2) 6YHNR32ME	3	58-1/8	90-7/8	207-1/4	4,760	80.2
K*DD080M4A*	(2) 6YJNR39ME	3	58-1/8	90-7/8	207-1/4	4,760	80.2
K*DD100M4A*	(2) 6YUNR48ME	3	58-1/8	90-7/8	207-1/4	4,950	80.2
K*DD044L4A*	(2) 4YJNF59KE	2	58-1/8	90-7/8	159-1/4	3,780	78.4
K*DD054L4A*	(2) 6YHNF68KE	2	58-1/8	90-7/8	159-1/4	3,980	78.4
K*DD060L4A*	(2) 6YJNF84KE	2	58-1/8	90-7/8	159-1/4	3,980	78.4
K*DD080L4A*	(2) 6YUNF10ME	2	58-1/8	90-7/8	159-1/4	3,980	78.4

PARALLEL COMPRESSOR MODELS

Model No.	Comp. Model No.	Fans Long	Dimensions (in.)			Approx. Ship Wt. (lbs.)	Sound Data dBA†
			H	W	L		
K*DP050M4A*	(2) 4YHNR22ME	2	58-1/8	90-7/8	159-1/4	3,720	78.4
K*DP060M4A*	(2) 4YJNR27ME	2	58-1/8	90-7/8	159-1/4	3,720	78.4
K*DP070M4A*	(2) 6YHNR32ME	3	58-1/8	90-7/8	207-1/4	4,680	80.2
K*DP080M4A*	(2) 6YJNR39ME	3	58-1/8	90-7/8	207-1/4	4,680	80.2
K*DP100M4A*	(2) 6YUNR48ME	3	58-1/8	90-7/8	207-1/4	4,880	80.2
K*DP044L4A*	(2) 4YJNF59KE	2	58-1/8	90-7/8	159-1/4	3,720	78.4
K*DP054L4A*	(2) 6YHNF68KE	2	58-1/8	90-7/8	159-1/4	3,920	78.4
K*DP060L4A*	(2) 6YJNF84KE	2	58-1/8	90-7/8	159-1/4	3,920	78.4
K*DP080L4A*	(2) 6YUNF10ME	2	58-1/8	90-7/8	159-1/4	3,920	78.4

* Each asterisk represents a variable character based upon model and voltage ordered. See page 3 for nomenclature.

† Estimated dBA values at 10 feet from the unit. Correction factors: Deduct 6 dBA for 20 to 40 feet, 12 dBA @ 40 to 60 feet.

Ratings at the outlet of the discharge air. The actual measurements may vary depending upon installation variables.

Environmental factors may have a significant influence on this data.

See page 41 for dimensional drawings.

DIMENSIONAL DRAWINGS

Figure 1: Single Compressor

Single Compressor Width

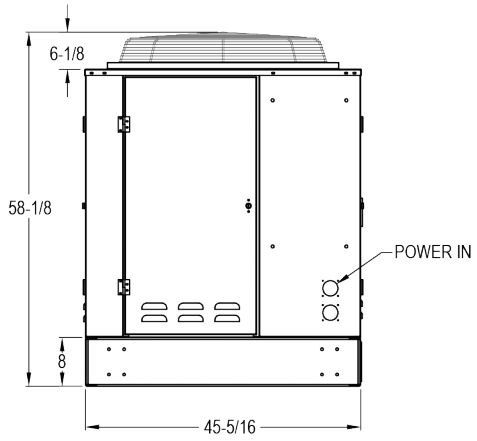

Figure 2: Dual and Parallel Compressor

Dual and Parallel Compressor Width

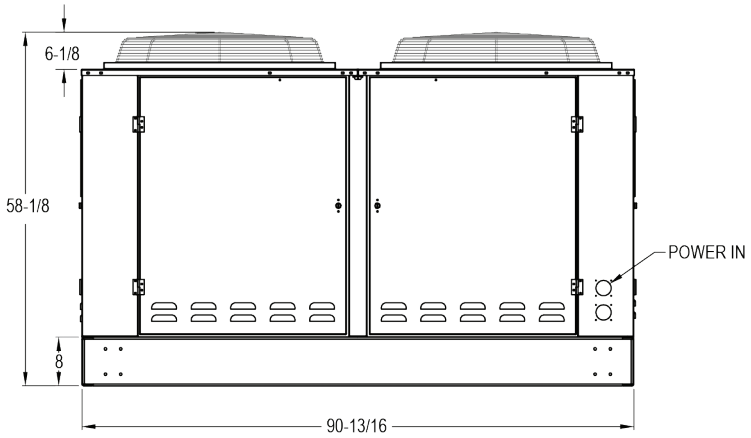

All dimensions are in inches.
Utilize all lifting points during installation.
Refrigerant connections located on each side for Dual models.

DIMENSIONAL DRAWINGS

Figure 3: 2 Fan

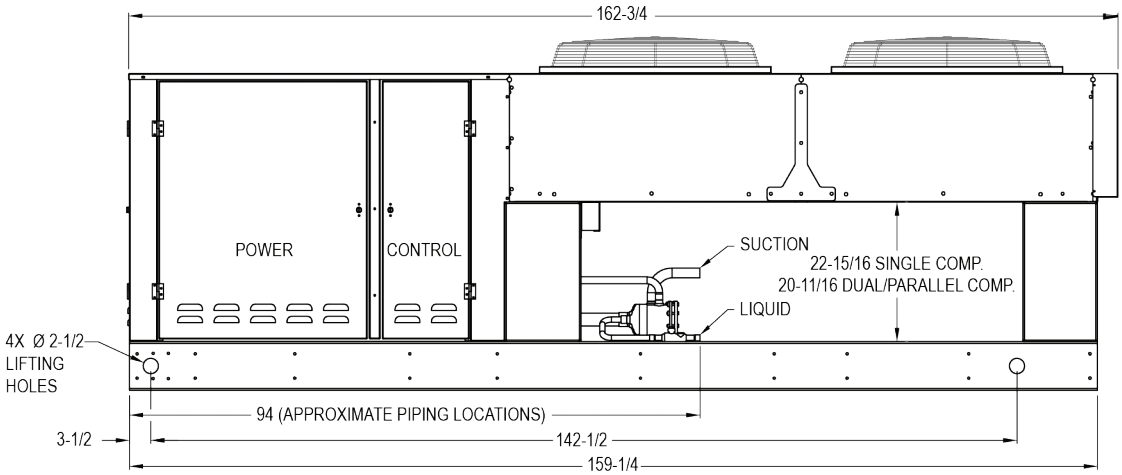

Figure 4: 3 Fan

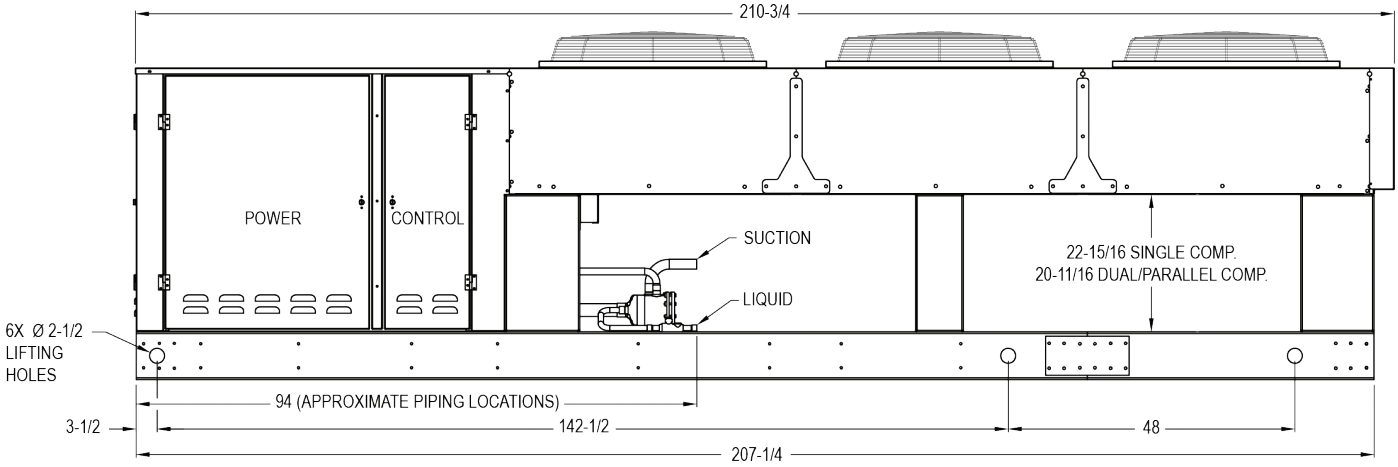

All dimensions are in inches.
Utilize all lifting points during installation.
Refrigerant connections located on each side for Dual models.

DEPARTMENT OF ENERGY ANNUAL WALK-IN ENERGY FACTOR (AWEF) ^ RATINGS

Base Model Number		AWEF
Medium Temperature Models	K*BV015M4A*	7.6
	K*BV020M4A*	7.6
	K*BV025M4A*	7.6
	K*BV030M4A*	7.6
	K*BV035M4A*	7.6
	K*BV040M4A*	7.6
	K*BV050M4A*	7.6

If the medium temperature model has a numerical value in the table above, the following statement applies:
"This refrigeration system is designed and certified for use in walk-in cooler applications."

Base Model Number		AWEF
Low Temperature Models	K*BV022L4A*	3.15
	K*BV027L4A*	3.15
	K*BV030L4A*	3.15

If the low temperature model has a numerical value in the table above, the following statement applies:
"This refrigeration system is designed and certified for use in walk-in freezer applications."

NOMINAL COMPRESSOR HP

Single Compressor	Dual Piping	Parallel Piping
15 HP	30 (2) 15 HP	-
20 HP	40 (2) 20 HP	-
22 HP	44 (2) 22 HP	44 (2) 22 HP
25 HP	50 (2) 25 HP	50 (2) 25 HP
27 HP	54 (2) 27 HP	54 (2) 27 HP
30 HP	60 (2) 30 HP	60 (2) 30 HP
35 HP	70 (2) 35 HP	70 (2) 35 HP
40 HP	80 (2) 40 HP	80 (2) 40 HP
50 HP	100 (2) 50 HP	100 (2) 50 HP

^ Larger HP Single QV Series and Parallel Compressor models are not intended for use in walk-in coolers and freezers less than 3,000 sq. feet thus are outside of the scope of this DOE regulation.

Dual Compressor models serve more than one refrigerated load thus are outside (exempt) of the scope of this DOE regulation.

ENGINEERED FOR COOL.™

©2026 Heat Transfer Products Group
Published October 2026
KM-QVB-Dual-1026
kramer.htpg.com

This information is the most current and accurate information available and is subject to change without notice. HTPG makes no warranty or guarantee of any kind, express or implied, regarding the information set forth herein, including without limitation warranty regarding its currency, accuracy or completeness or any warranty of merchantability or fitness for a particular purpose.

HTPG