Russell

WALL-TEMP
PANEL COOLERS

For beverage boxes, reach-ins and other installations where limited space requires a wall-mounted coil of minimum depth.

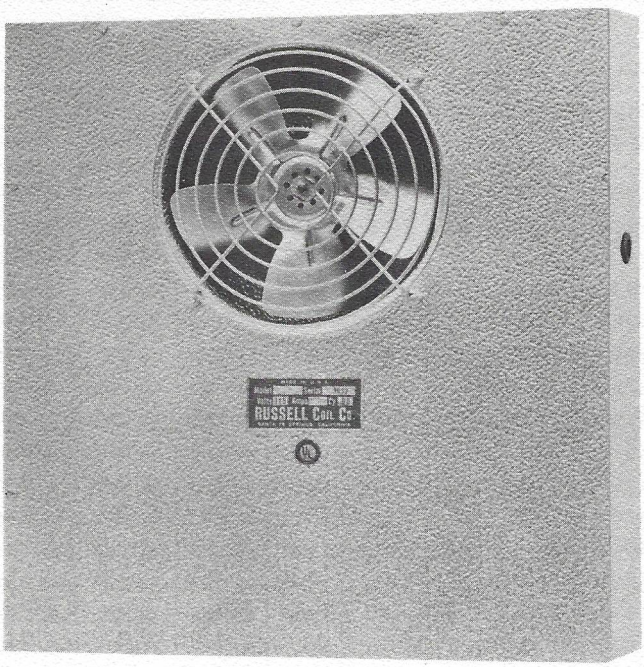

DIMENSION DIAGRAM

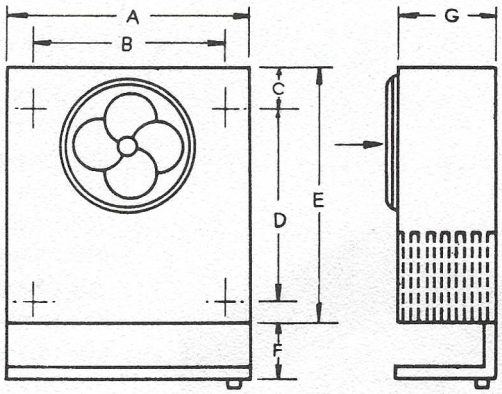

(drain pan additional)

NOTE: *Housing construction all aluminum. Front panel detachable for quick, easy access to valve, motor and fan, and for mounting t wall through back panel.*

DIMENSIONS

Model	A	B	C	D	E	F	G
WA 17-6	12"	9½"	2½"	14½"	17½"	3⅜"	4⅜"
WA 17-9	12"	9½"	2½"	14½"	17½"	3⅜"	4⅜"
WA 17-12	18"	14½"	2½"	16½"	19½"	3⅜"	4¾"
WA 17-18	18"	14½"	2½"	16½"	19½"	3⅜"	4¾"
WA 17-25	18"	14"	2½"	21"	24"	5"	8½"
WA 17-35	18"	14"	2½"	21"	24"	5"	8½"
WA 17-45	18"	14"	2½"	22½"	25½"	6⅝"	10½"

CONNECTION SIZES

Model	Liquid Conn.	Suct. Conn.	Drain Outlet
WA 17-6	⅜" FN	⅜" MF	½" FP
WA 17-9	⅜" FN	⅜" MF	½" FP
WA 17-12	½" FN	½" MF	½" FP
WA 17-18	½" FN	½" MF	½" FP
WA 17-25	½" FN	⅝" MF	½" FP
WA 17-35	½" FN	⅝" MF	½" FP
WA 17-45	½" OD	⅝" OD	½" FP

SPECIFICATIONS

MODEL	BTU/HR. RATING F-12		Total Surface FT.²	Tube O.D.	FAN AND MOTOR			
	10° T.D.	15° T.D.			Fan Dia.	Motor H.P.	RPM	CFM
WA 17-6	600	900	16.2	⅜"	8"	1/180	1500	115
WA 17-9	900	1350	22.7	⅜"	8"	1/80	1500	140
WA 17-12	1200	1800	35.2	½"	8"	1/80	1500	175
WA 17-18	1800	2700	52.9	½"	8"	1/80	1500	260
WA 17-25	2500	3750	83.4	⅝"	10"	1/30	1500	360
WA 17-35	3500	5250	104.3	⅝"	10"	1/30	1500	500
WA 17-45	4500	6750	130.3	⅝"	12"	1/12	1050	625

Russell Coil Company
221 South Berry Street, Brea, California 92621
Brea (714) 529-1935 / LA (213) 691-3246

A subsidiary of Ardco Inc.